معاونت مهندسی و کیفیت

جزوه آموزشی

نقشه های الکتریکی خودرو

هایما S7 TC

کلید مدرک ۱۶۲۷۵

تابستان ۱۳۹۵

SYSTEM CONTENS

General Wire Color Code

Color	Code	Color	Code
Black	B	Light Green	LG
Brown	BR	Orange	O
Dark blue	DL	Pink	P
Dark Green	DG	Red	R
Gray	GR	Sky Blue	SB
Green	G	Violet	V
Light blue	LB	White	W
Blue	L	Yellow	Y

Harness symbol

Name	Symbol		Name	Symbol	
Front harness	F		Grounding harness	EA	
Engjne harness	E		Interior harness	IN	
EM harness	EM		Reversing radar harness	RA	
Middle harness	D		2# Back door harness	R2#	
Rear harness	R		1# Back door harness	R1#	
Front left door harness	DR1				
Front right door harness	DR2				
Rear left door harness	DR3				
Rear right door harness	DR4				
Instrument harness	I				

Ground point

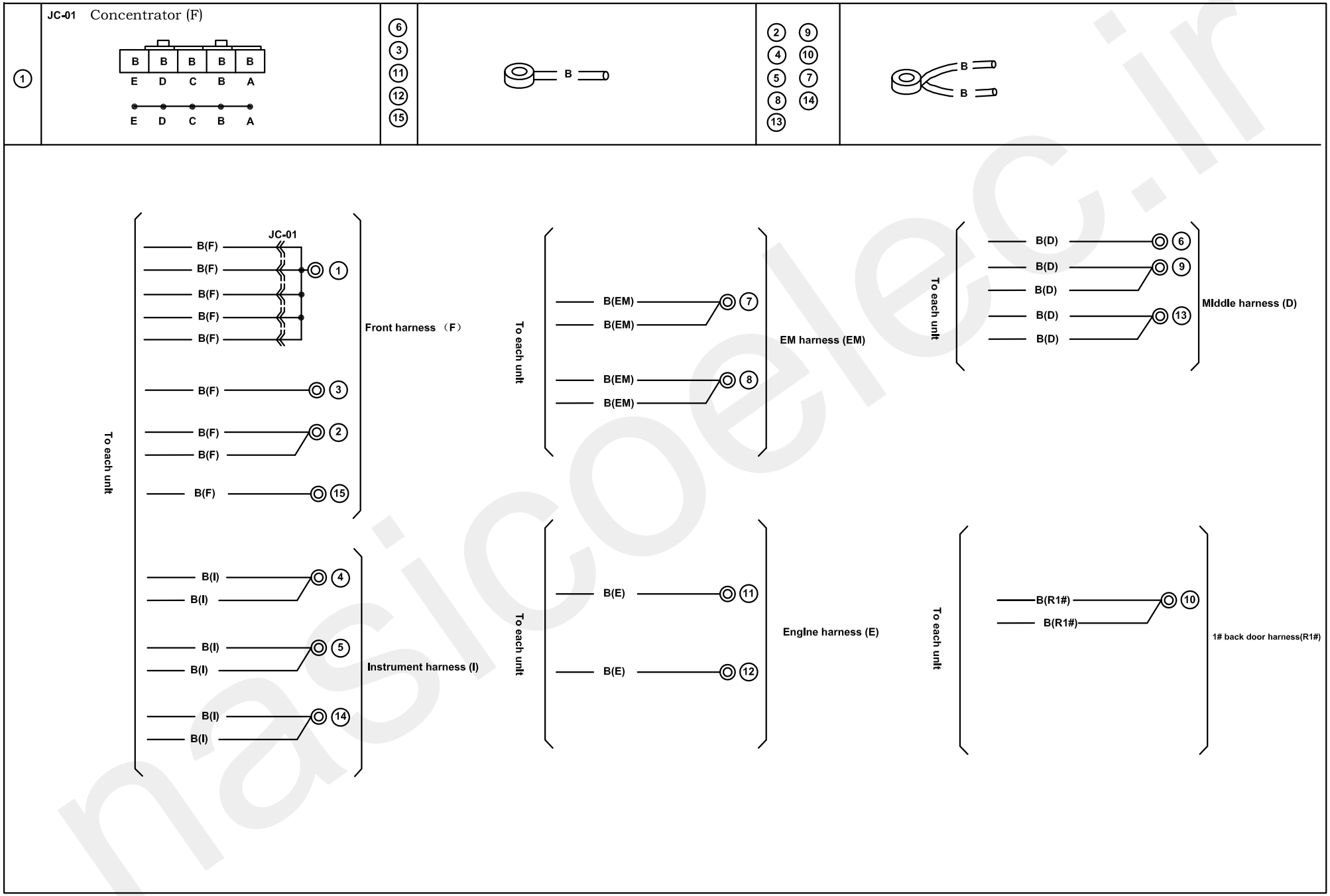

Harness mark: (F) (E) (D) (R)

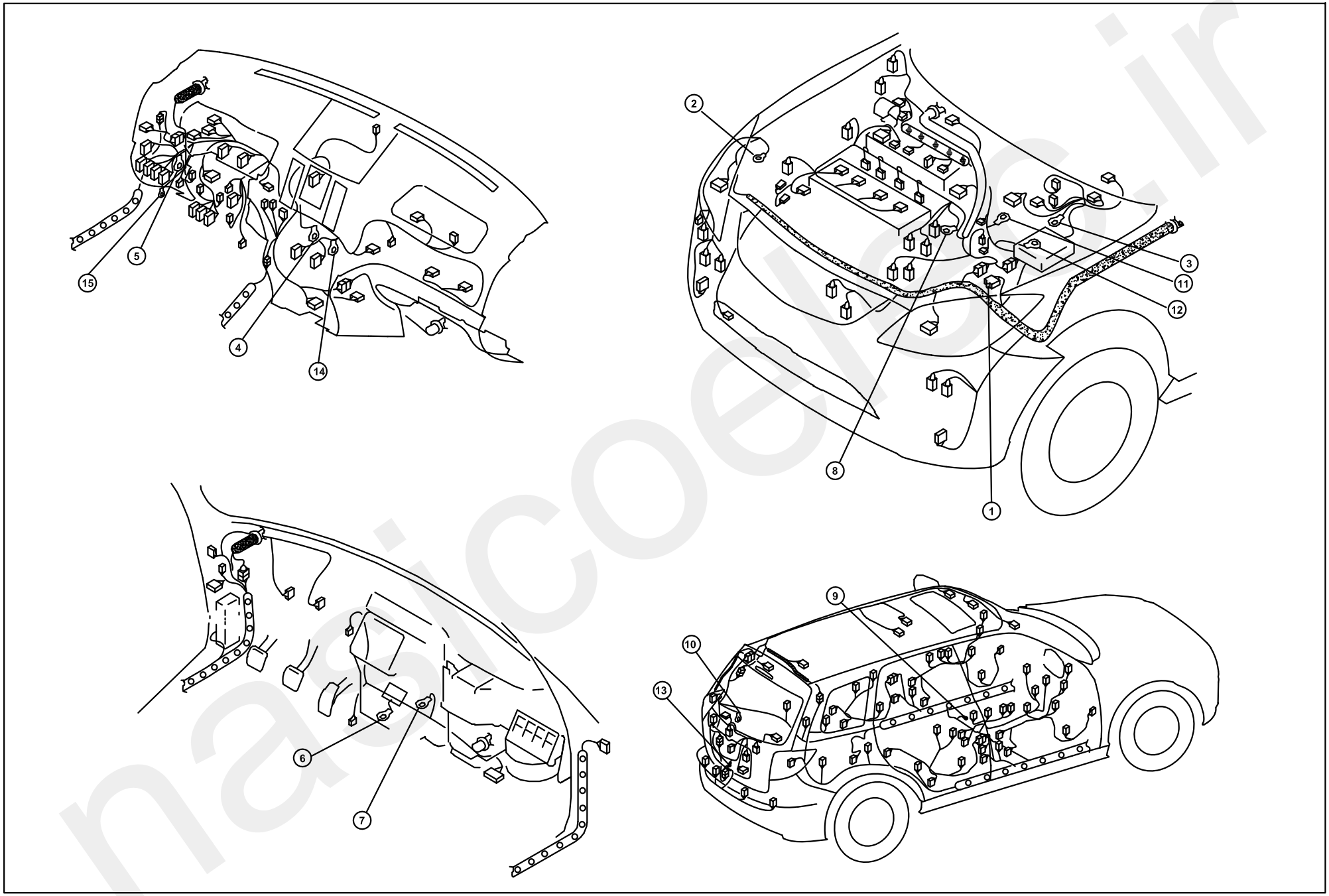

Electric harness schematic (without smart key)

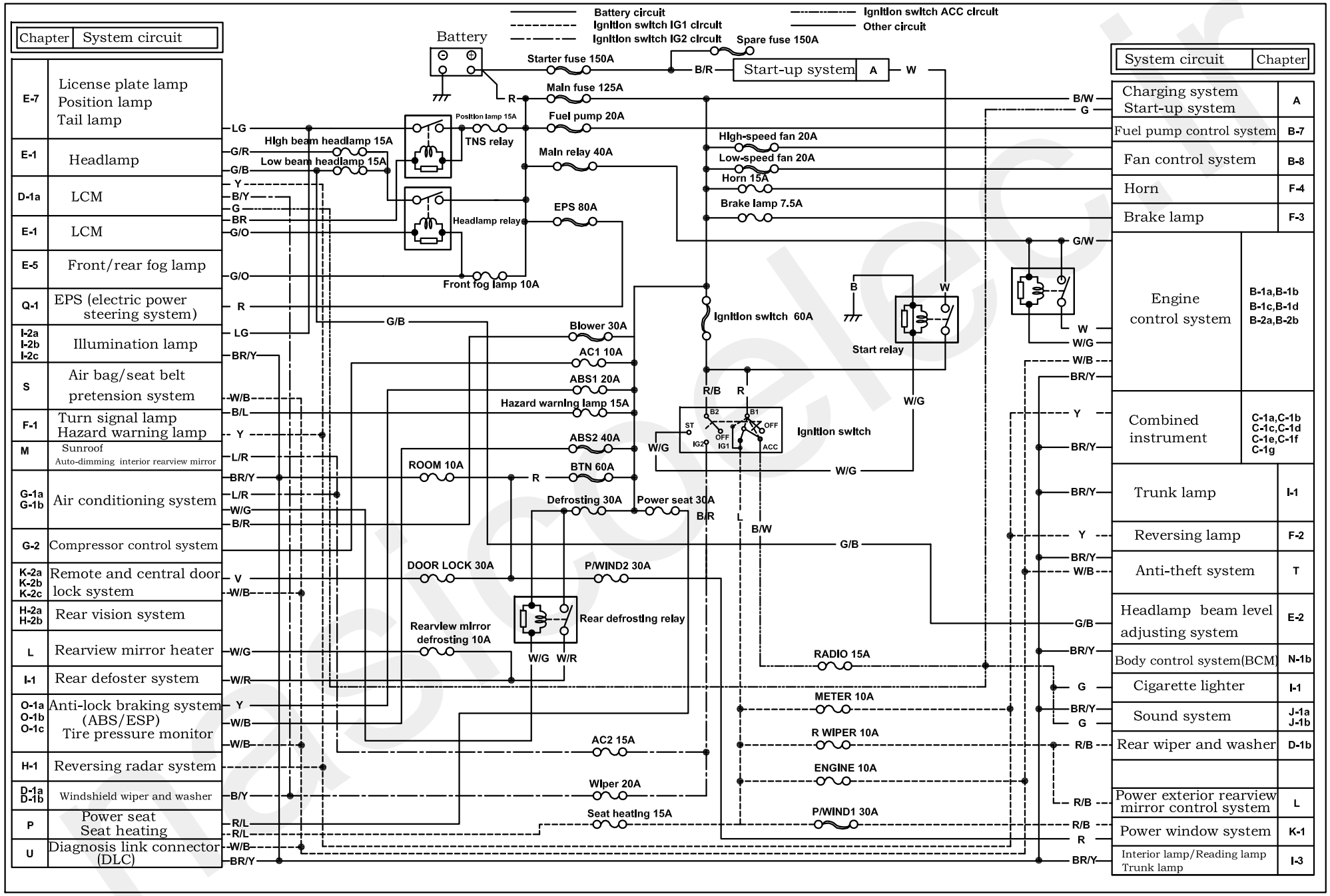

Electric harness schematic (with smart key)

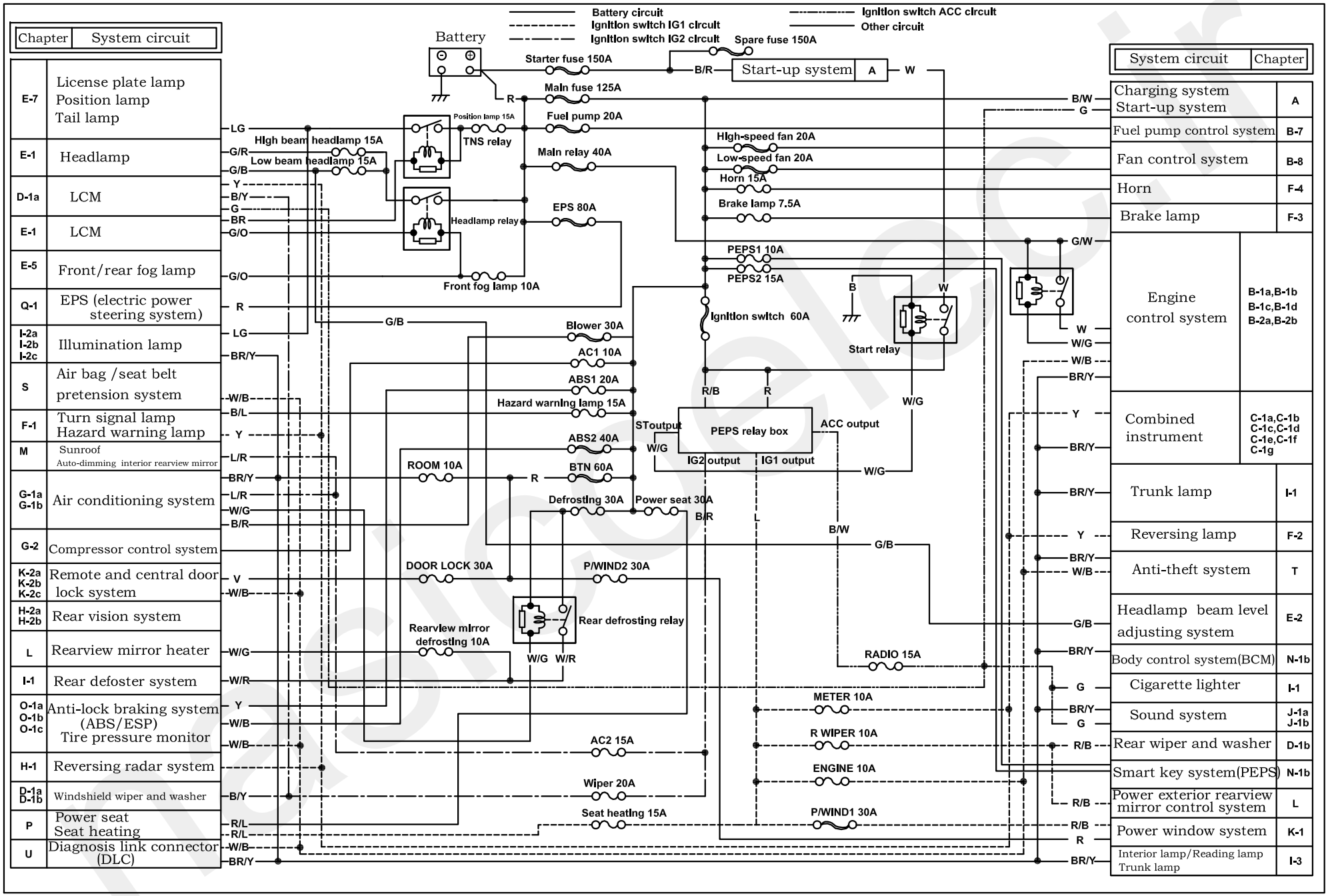

Battery

R(E)

FB-02

MAIN 125A

FB-01 (A)

B/W(E)

B/W(E)

IG KEY 60A

A1-03

Starter fuse 150A

Ignition switch(ST) (SECTION Z-1a)

360

W/G(I)

X-05

W/G(EM)

X-07

W/G(F)

FB-06

Ignition switch(ACC) (SECTION Z-1a)

ACC relay (SECTION Z-2a)

361

W/L(I)

X-06

W/L(D)

JB-05

RADIO 15A

JB-02

G(D)

X-02

G(F)

X-07

G(EM)

X-04

G (E)

A1-02

Generator

A1-02

BR/W(E)

X-04

BR/W(EM)

X-05

B/R(E)

Starter

A1-01

Starter relay

FB-07

FB-06

W(E)

B(F)

A1-01

With PEPS

326

PEPS

(SECTION N-1a)

Combined instrument

(SECTION C-1e)

6

BR/W(I)

1

A1-01 Starter (E) 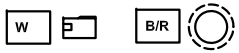	**A1-02** Generator (E) 	**A1-02** Generator (E) 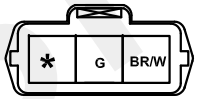	**A1-03** Battery B+ (E) 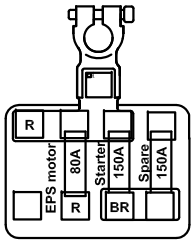			

Harness mark: (F) (E) (D) (R)

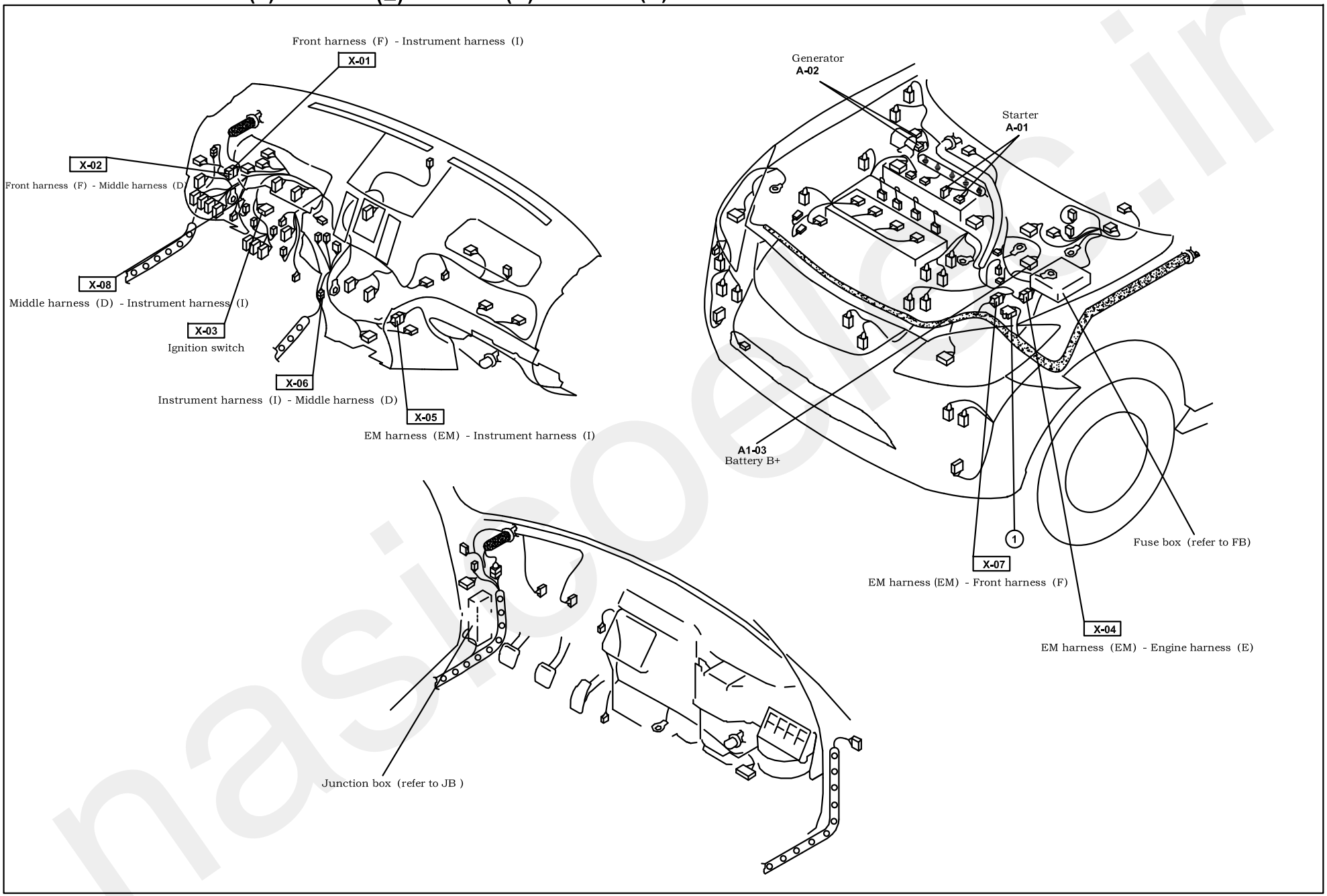

Start-stop start-up system

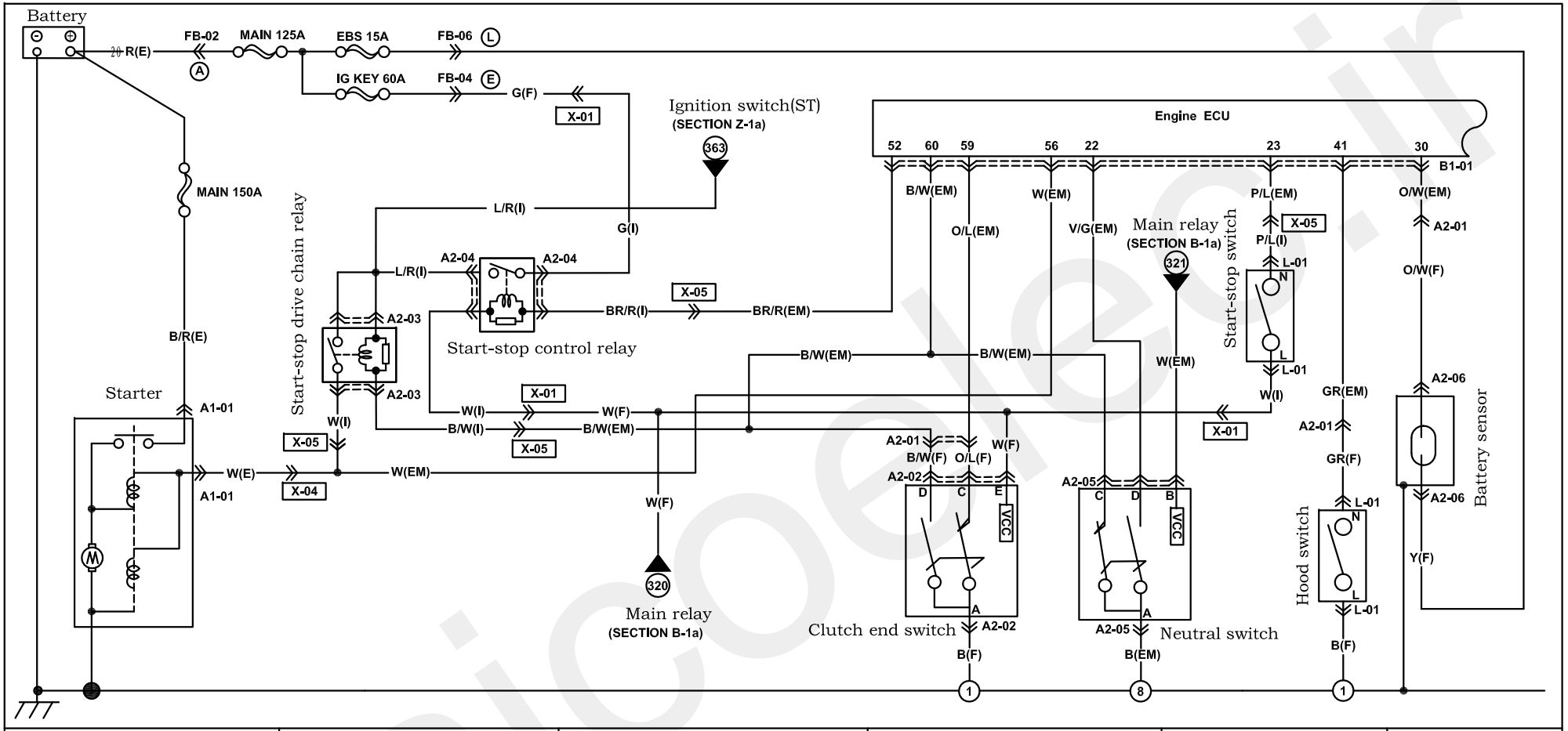

A1-01 Starter (E)

A2-01 Start-stop connector (EM)

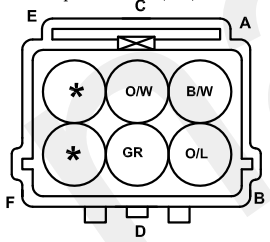

A2-02 Clutch switch (EM)

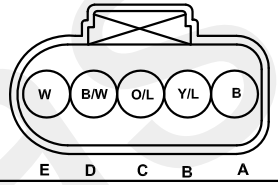

A2-07 Hood switch (F)

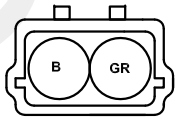

A2-03 Start-stop drive chain relay (EM)

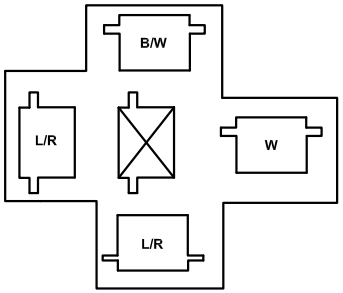

A2-04 Start-stop control relay (EM)

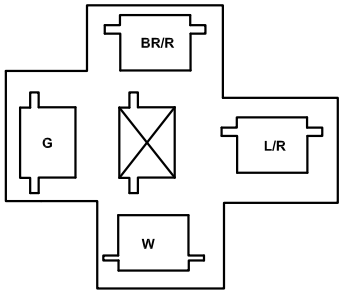

A2-05 Neutral switch (EM)

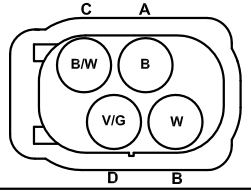

A2-06 Battery sensor (F)

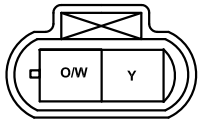

L-01 Integrated Switch (I) < > with start-stop

S	Q	O	M	K	I	G	E	C	A
R/B	LG	LG/B	L/W	L	L/O	L/B	V	R/G	R/Y
B	P	G/B	* <P/L>	W	*	*	*	*	B
T	R	P	N	L	J	H	F	D	B

Harness mark: (F) (E) (D) (R)

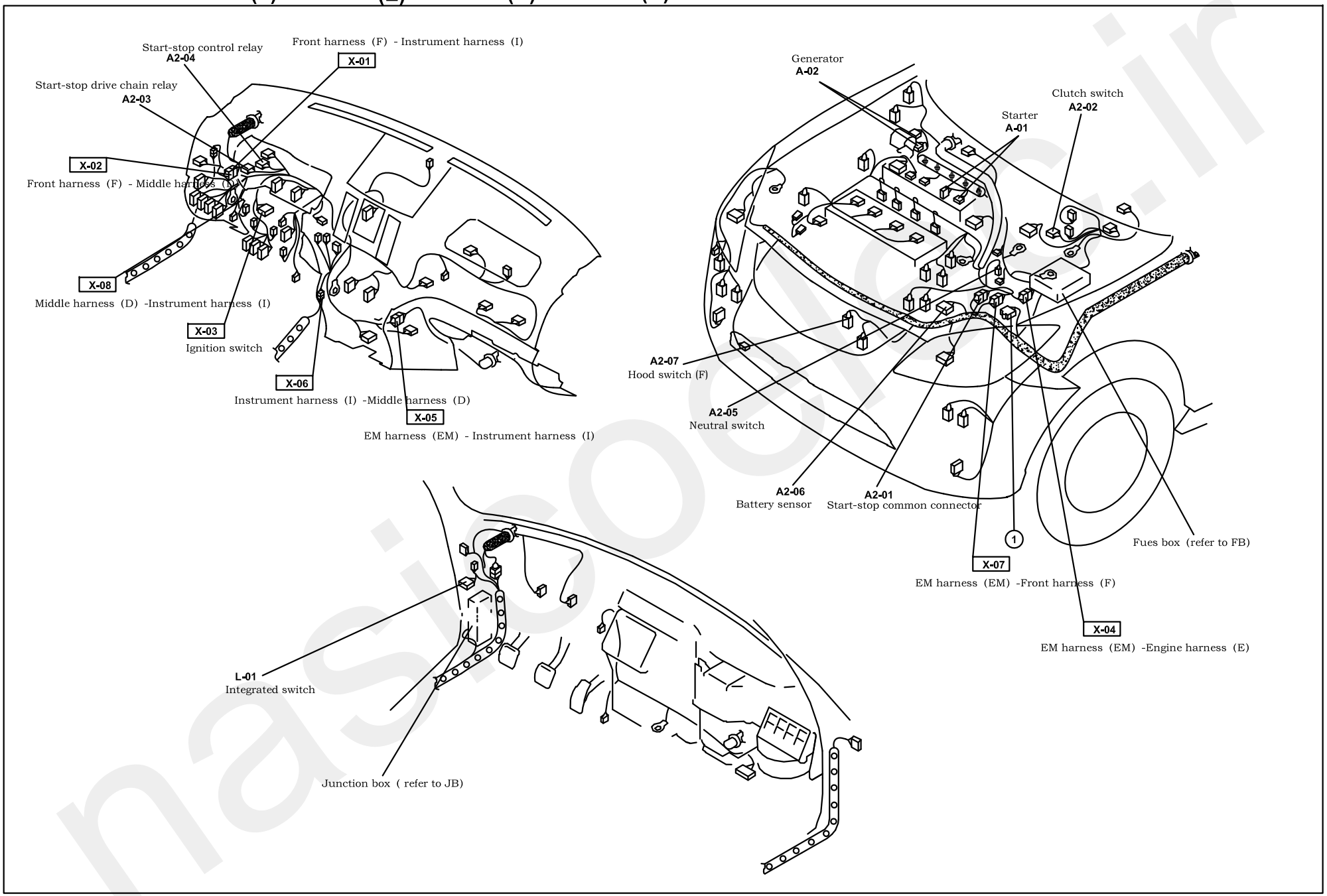

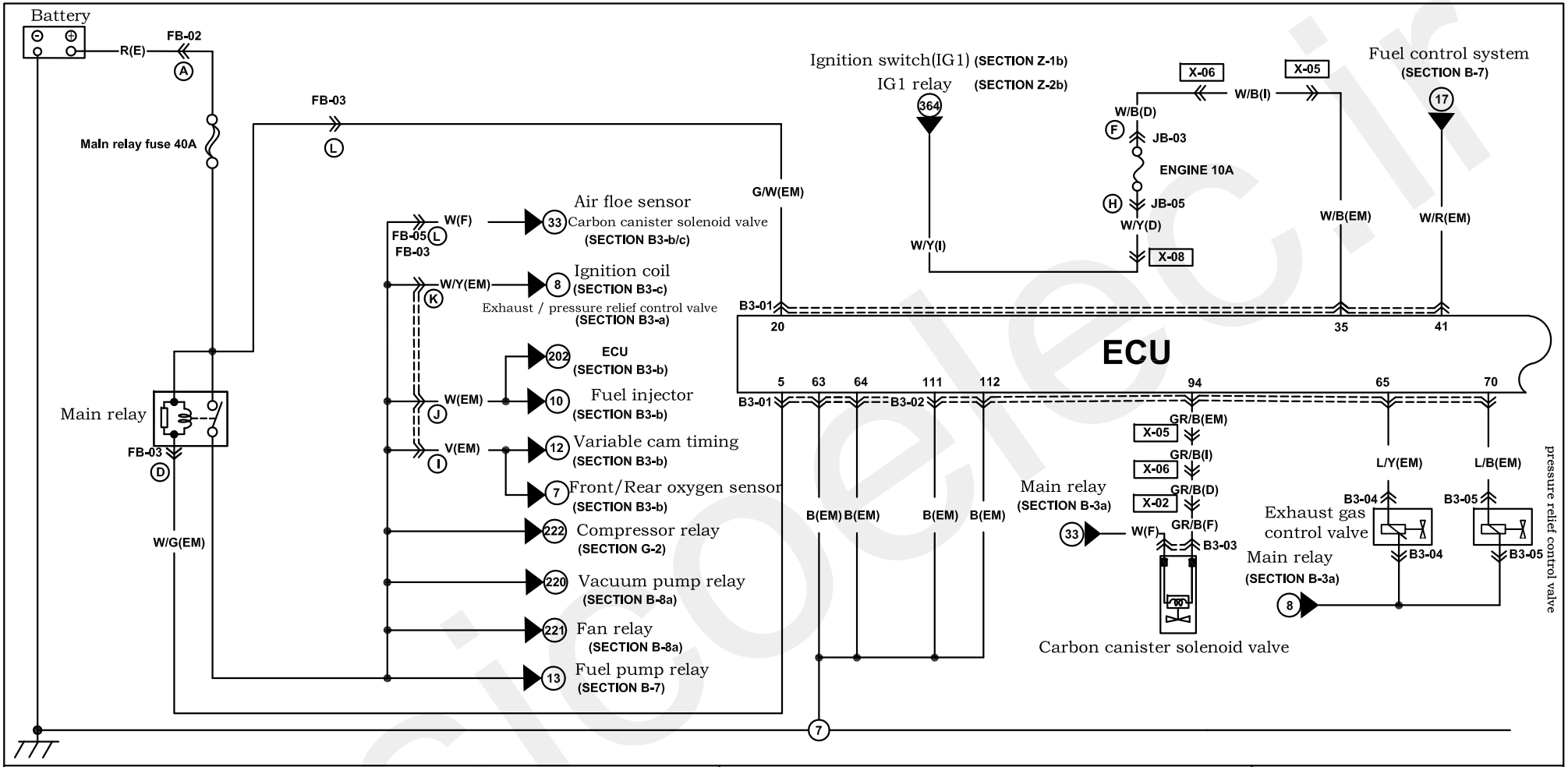

B3-01 ECU(EM)

64 B	63 B	62 P/G	61 O/W	60 LG	59 Y/L	58 *	57 *	56 Y/G	55 *	54 G/L	53 *	52 *	51 *	50 *	49 *
48 B/R	47 W/R	46 B/Y	45 LG/R	44 P/B	43 W/L	42 BR/Y	41 W/R	40 *	39 *	38 *	37 G/Y	36 Y/G	35 W/B	34 *	33 *
32 Y/G	31 *	30 Y/W	29 *	28 V	27 *	26 *	25 R/G	24 *	23 B/L	22 *	21 Y/B	20 G/W	19 V	18 *	17 L/O
16 W	15 W	14 *	13 *	12 O	11 *	10 *	9 G/O	8 *	7 L/W	6 *	5 W/G	4 *	3 *	2 *	1 B/G

B3-02 ECU(EM)

112 B	111 B	110 *	109 G/Y	108 LG/Y	107 Y/G	106 *	105 V/B	104 L/G	103 *	102 V/R	101 G/W
100 B/R	99 R/Y	98 Y/G	97 *	96 V/W	95 L/W	94 GR/B	93 W/G	92 *	91 BR/W	90 Y/L	89 BR/R
88 L	87 O	86 Y/R	85 W/R	84 GR/Y	83 *	82 *	81 *	80 L/W	79 *	78 GR	77 Y
76 L/O	75 W/Y	74 Y/G	73 L/O	72 W/B	71 L/R	70 L/B	69 P/L	68 R/Y	67 LG	66 *	65 L/Y

B3-03 Carbon canister solenoid valve (EM)

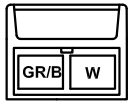

B3-04 Exhaust gas control valve (EM)

B3-05 pressure relief control valve (EM)

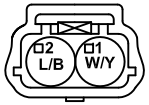

Harness mark: (F) (E) (D) (R)

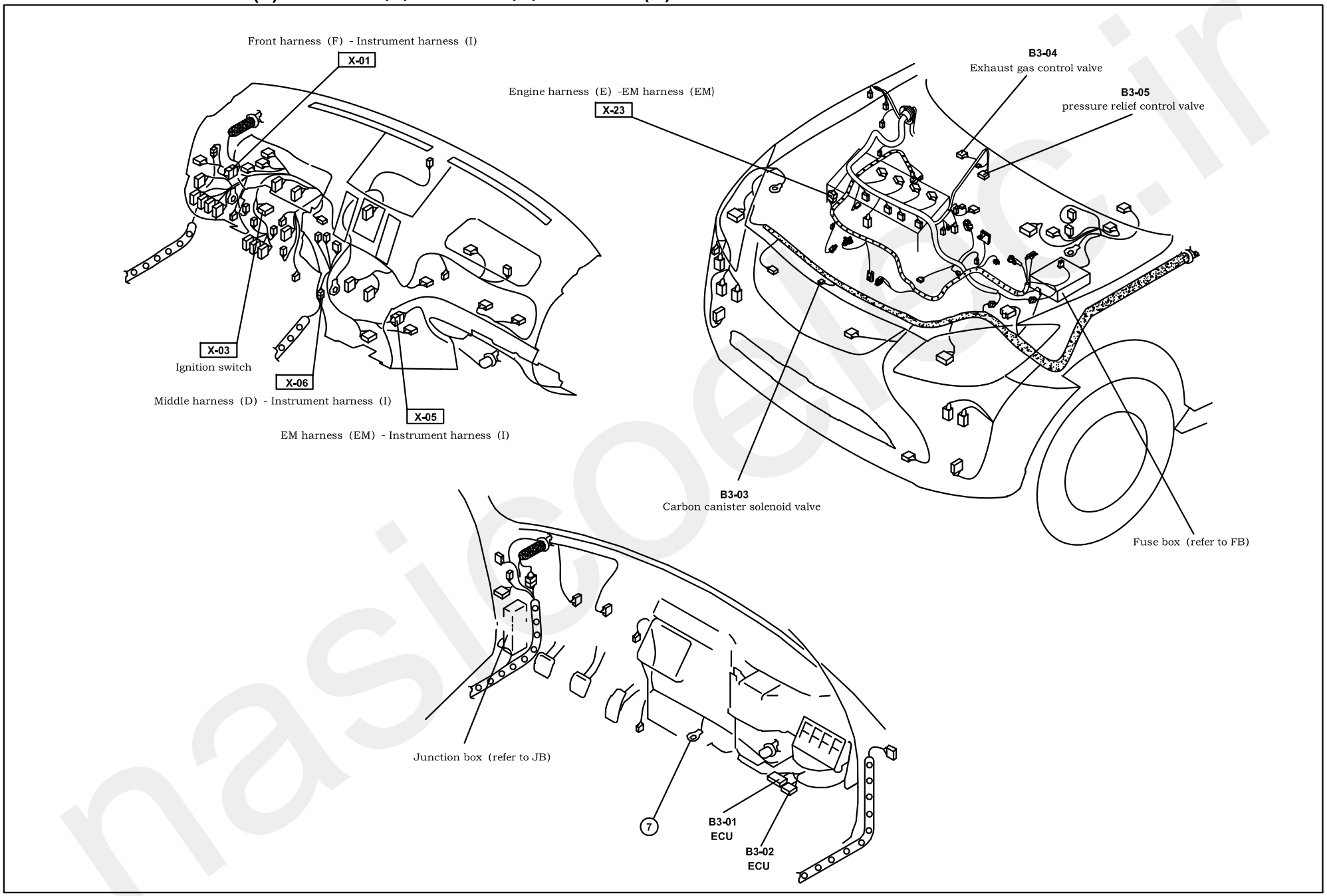

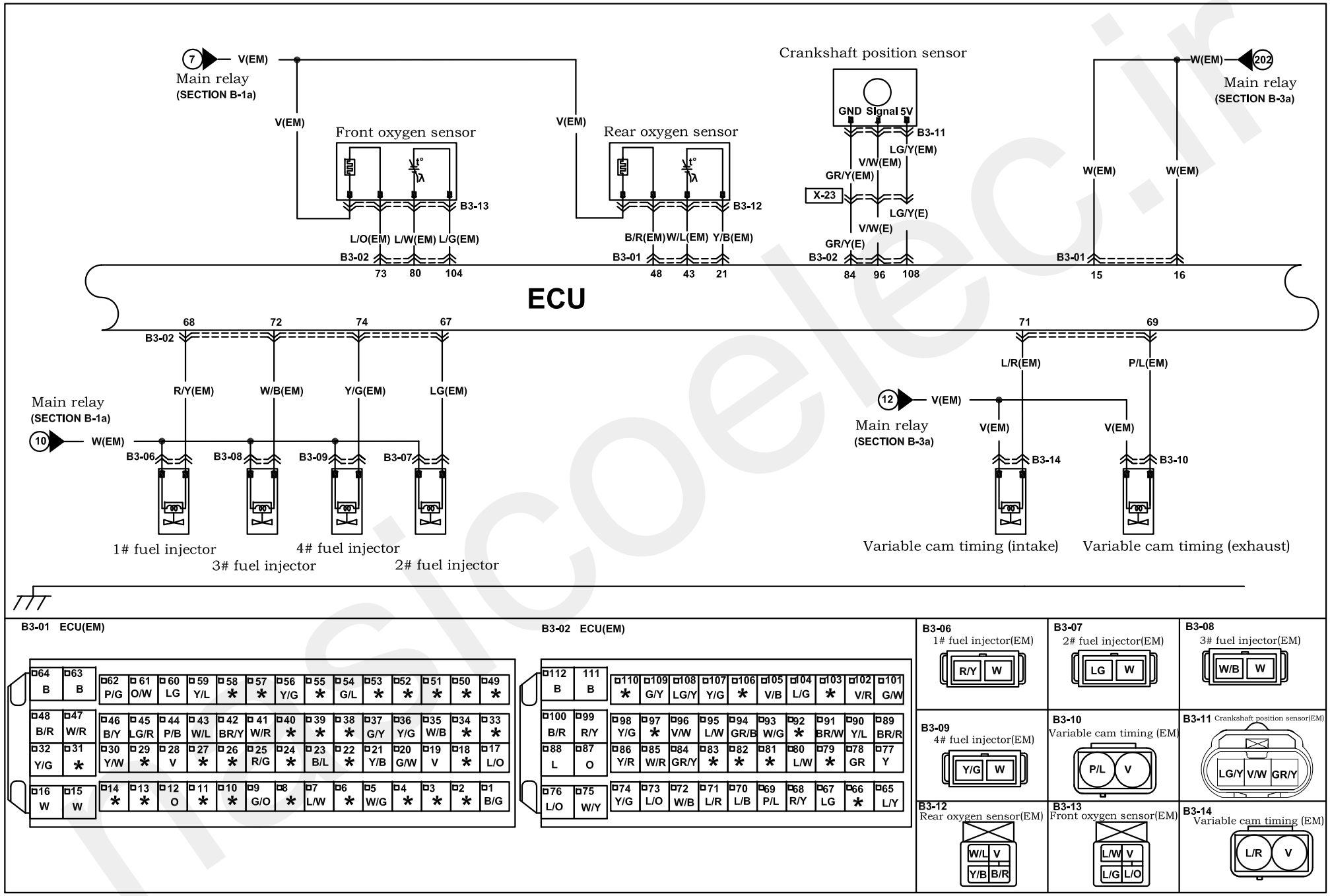

Harness mark: (F) (E) (D) (R)

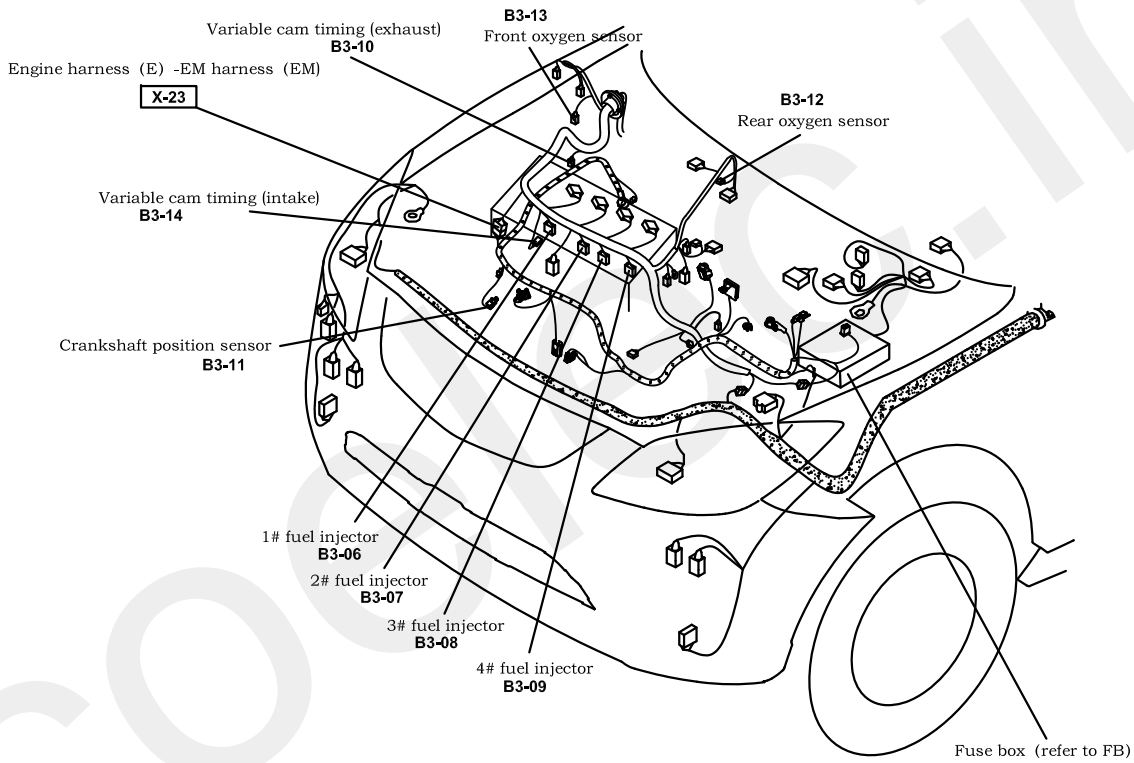

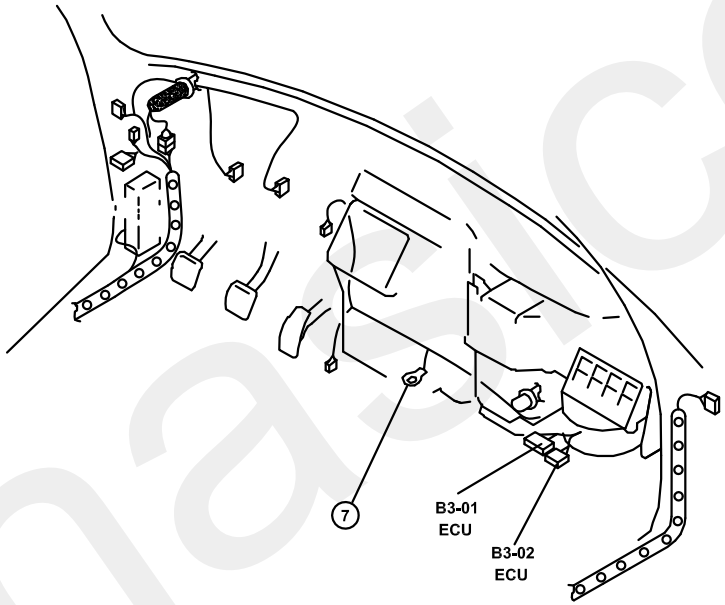

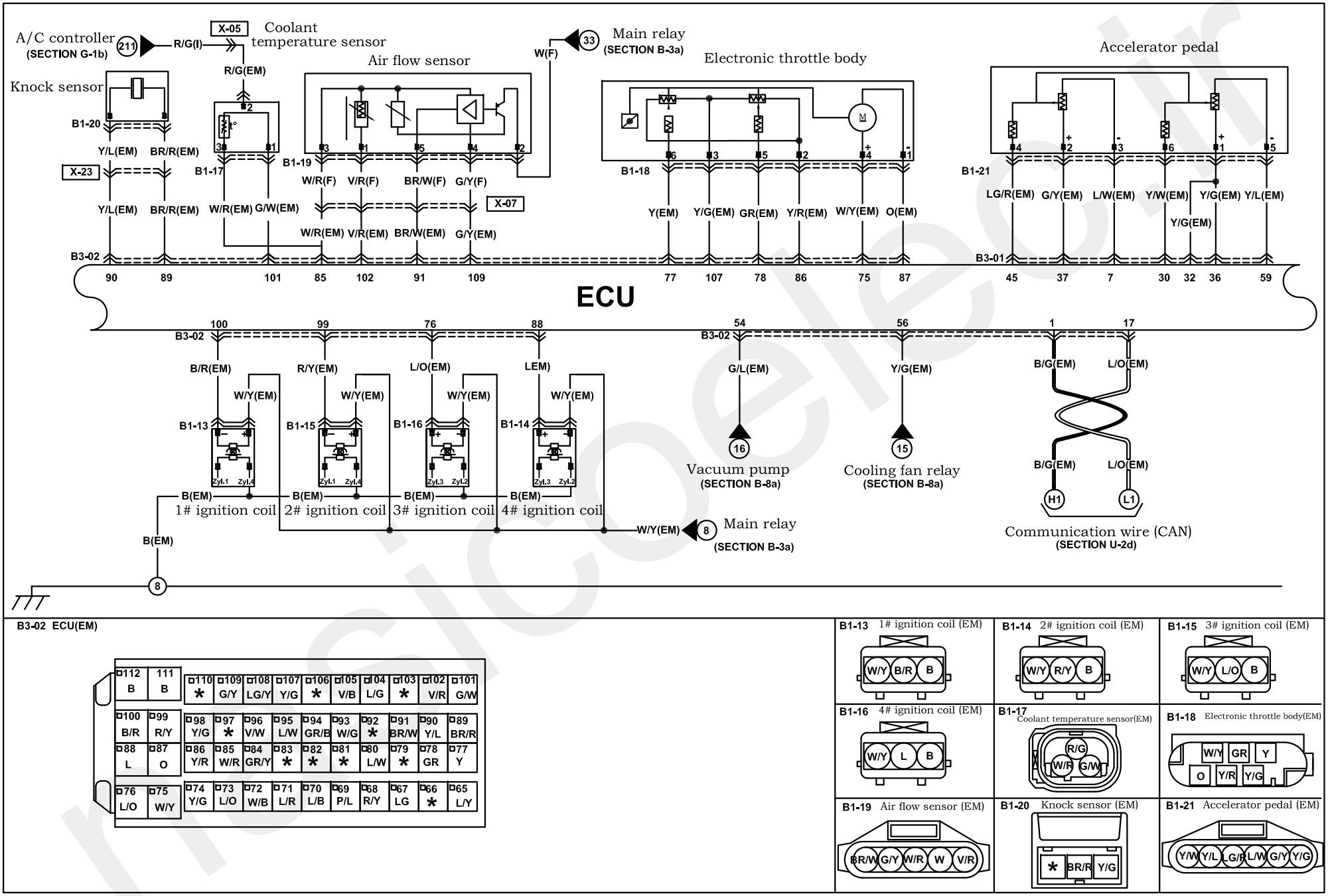

B3-02 ECU(EM)

112 B	111 B	110 *	109 G/Y	108 LG/Y	107 Y/G	106 *	105 V/B	104 L/G	103 *	102 V/R	101 G/W
100 B/R	99 R/Y	98 Y/G	97 *	96 V/W	95 L/W	94 GR/B	93 W/G	92 *	91 BR/W	90 Y/L	89 BR/R
88 L	87 O	86 Y/R	85 W/R	84 GR/Y	83 *	82 *	81 *	80 L/W	79 *	78 GR	77 Y
76 L/O	75 W/Y	74 Y/G	73 L/O	72 W/B	71 L/R	70 L/B	69 P/L	68 R/Y	67 LG	66 *	65 L/Y

Harness mark: (F) (E) (D) (R)

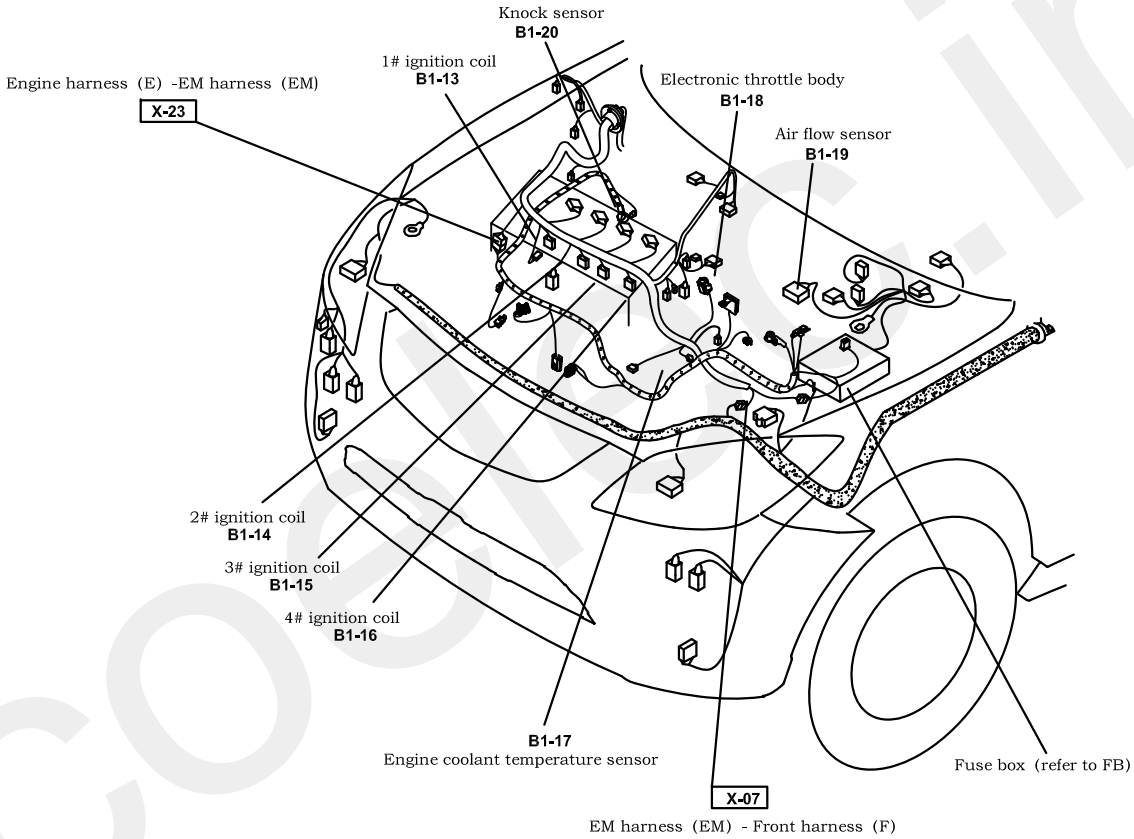

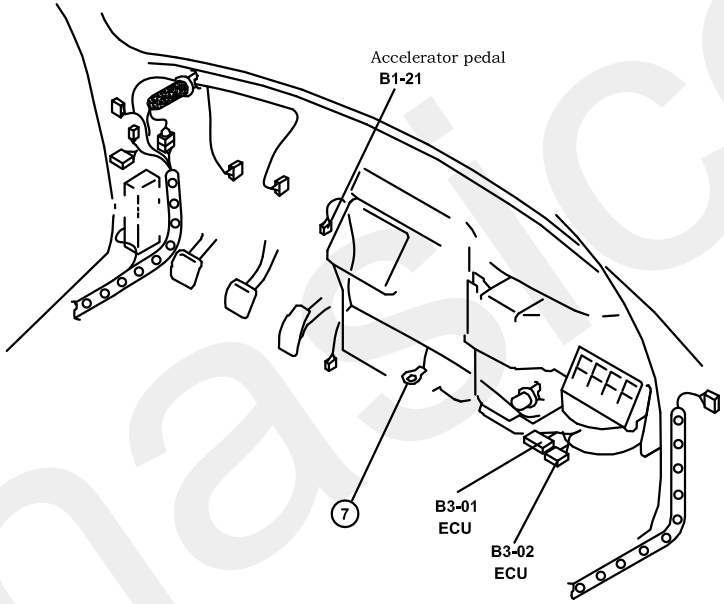

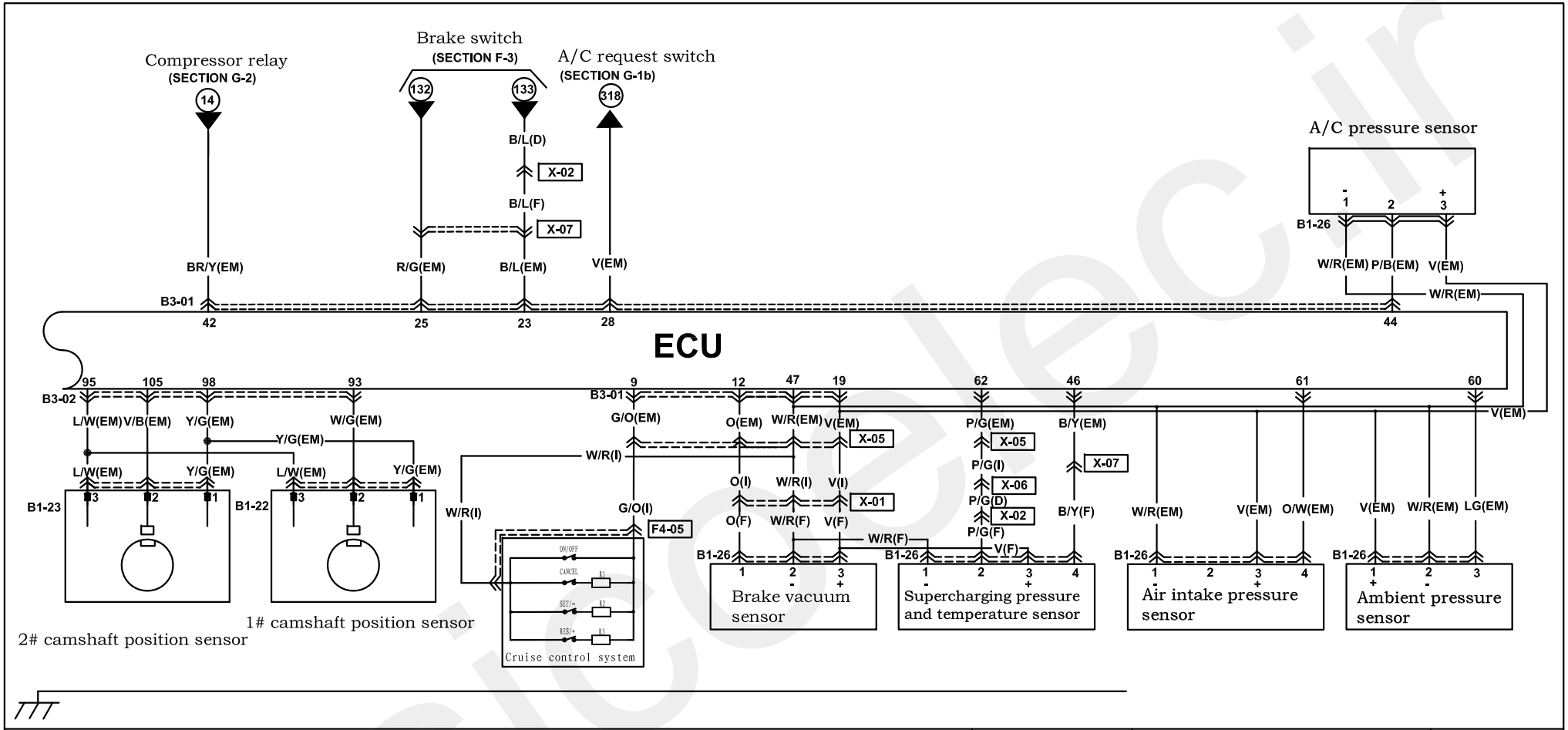

B3-01 ECU(EM)

64 B	63 B	62 P/G	61 O/W	60 LG	59 Y/L	58 *	57 *	56 Y/G	55 *	54 G/L	53 *	52 *	51 *	50 *	49 *
48 B/R	47 W/R	46 B/Y	45 LG/R	44 P/B	43 W/L	42 BR/Y	41 W/R	40 *	39 *	38 *	37 G/Y	36 Y/G	35 W/B	34 *	33 *
32 Y/G	31 *	30 Y/W	29 *	28 V	27 *	26 *	25 R/G	24 *	23 B/L	22 *	21 Y/B	20 G/W	19 V	18 *	17 L/O
16 W	15 W	14 *	13 *	12 O	11 *	10 *	9 G/O	8 *	7 L/W	6 *	5 W/G	4 *	3 *	2 *	1 B/G

B1-22
1# camshaft position sensor1(EM)

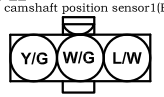

B1-23
2# camshaft position sensor(EM)

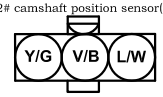

B1-23
Ambient pressure sensor (EM)

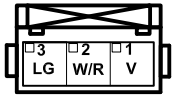

F4-05 Clock spring (I)

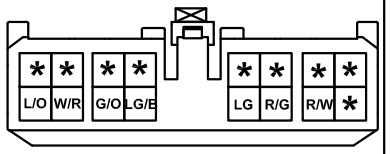

B1-26
Brake vacuum sensor (F)

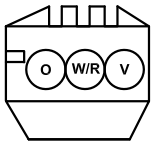

B1-23 Air intake pressure sensor(EM)

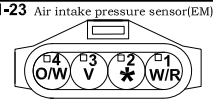

B1-23 Supercharging pressure and temperature sensor (F)

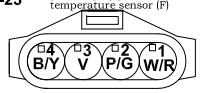

B1-23 A/C pressure sensor (EM)

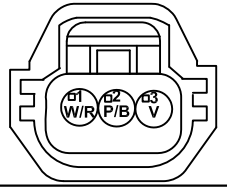

Harness mark: (F) (E) (D) (R)

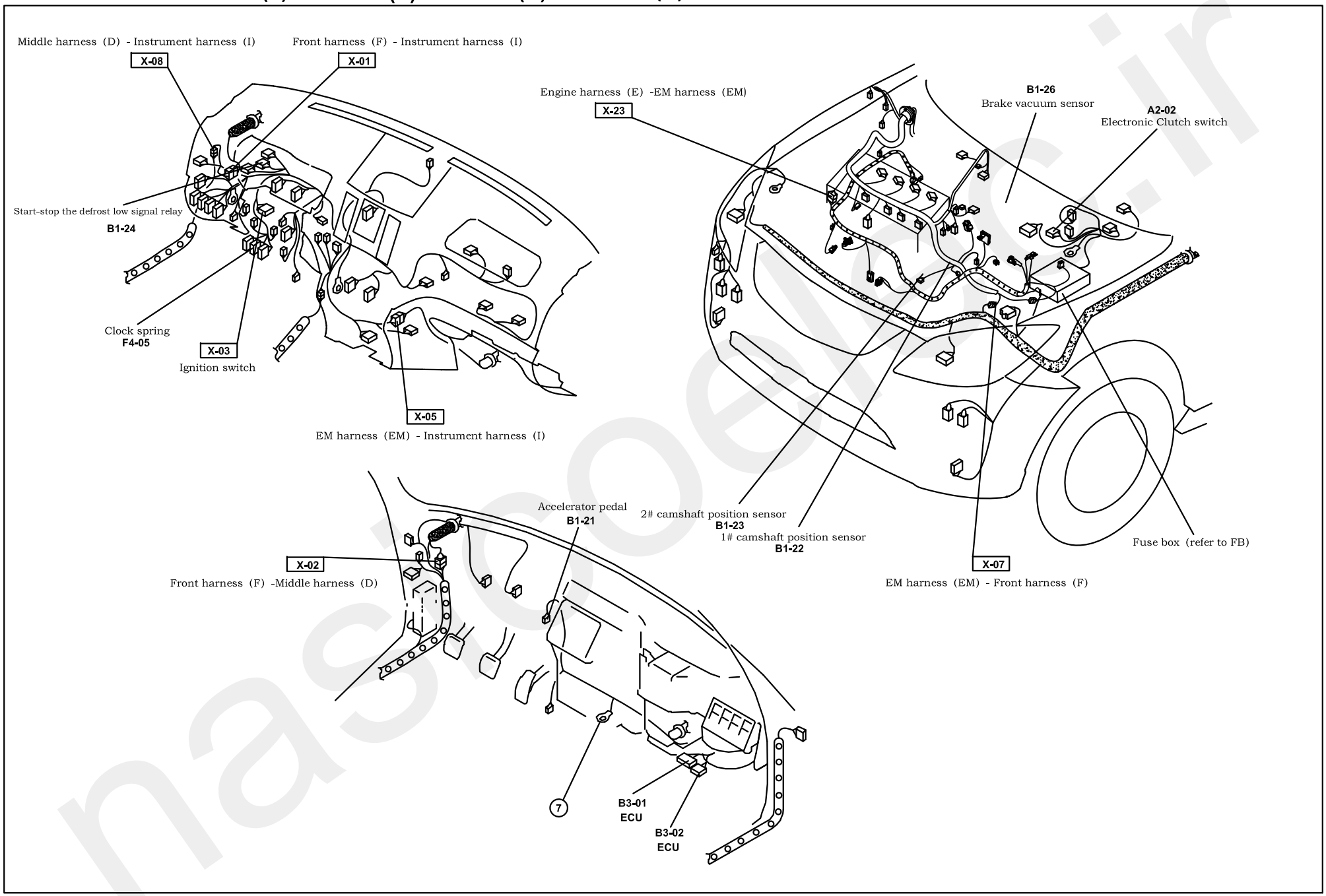

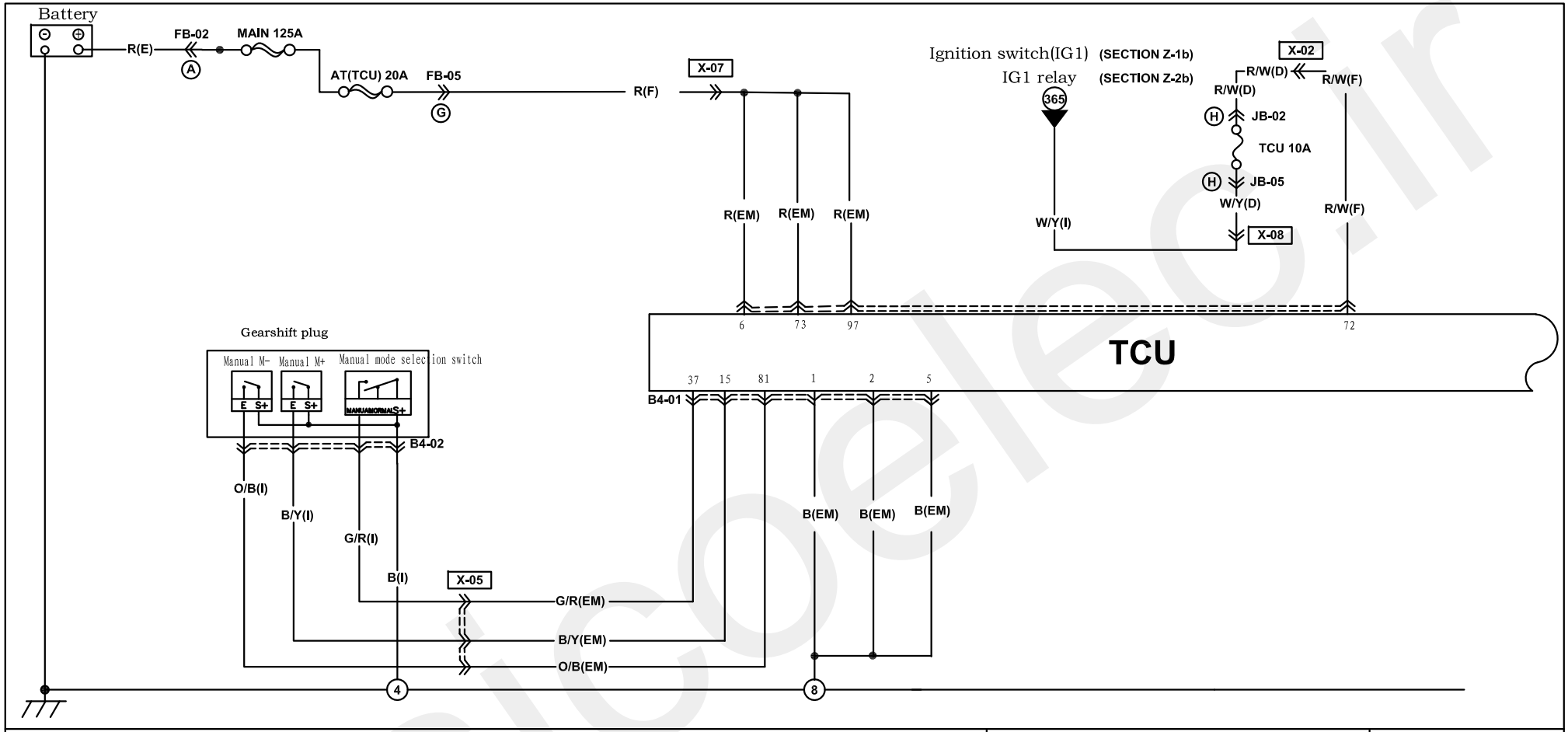

B4-01 TCU(EM)

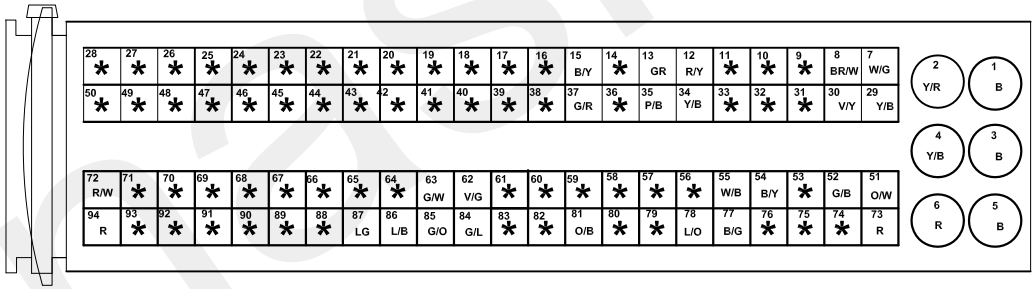

B4-02 Gearshift plug (I)

G	LG			B	B/Y	A
H	LG/B	*	G/R	*	O/B	B

Harness mark: (F) (E) (D) (R)

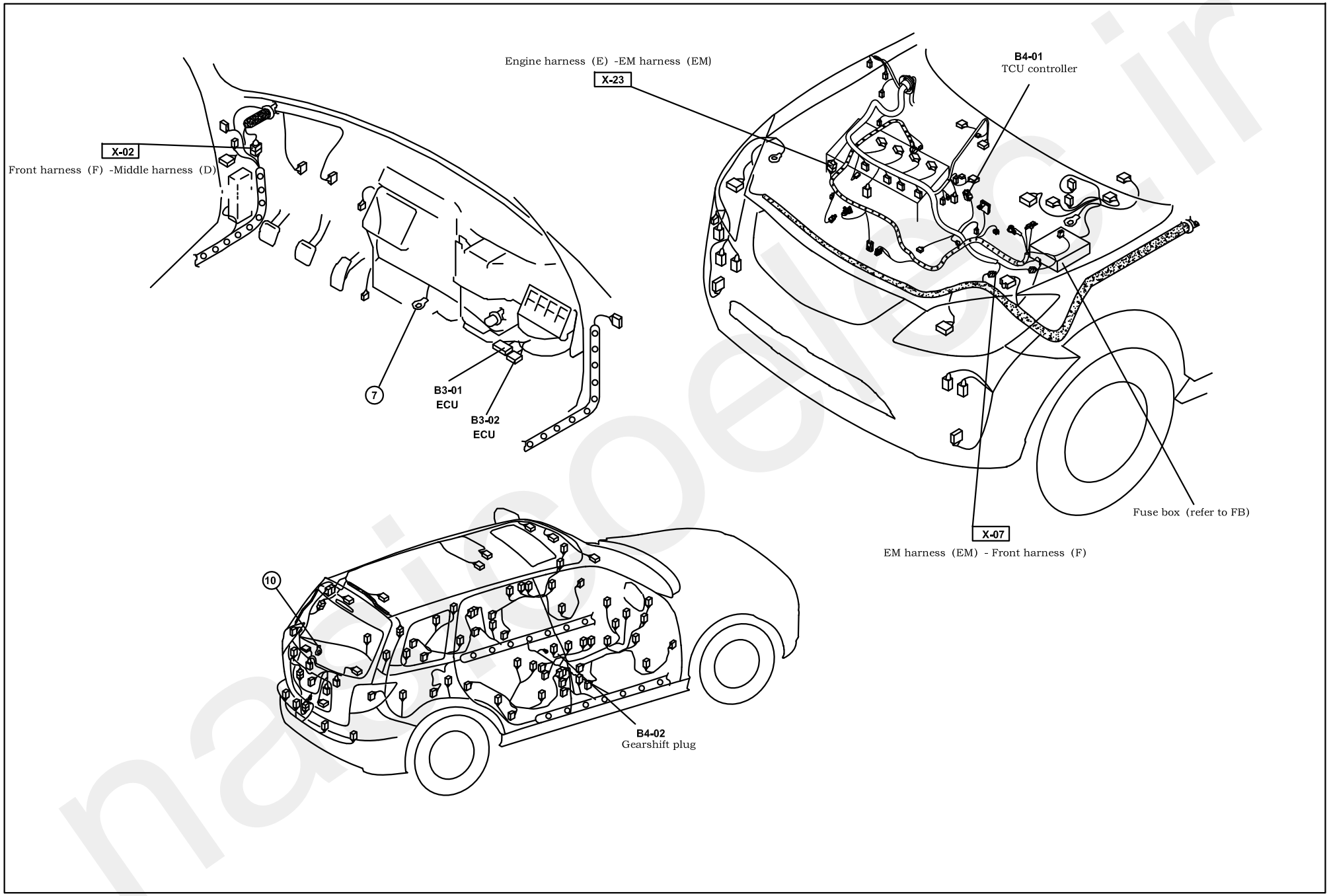

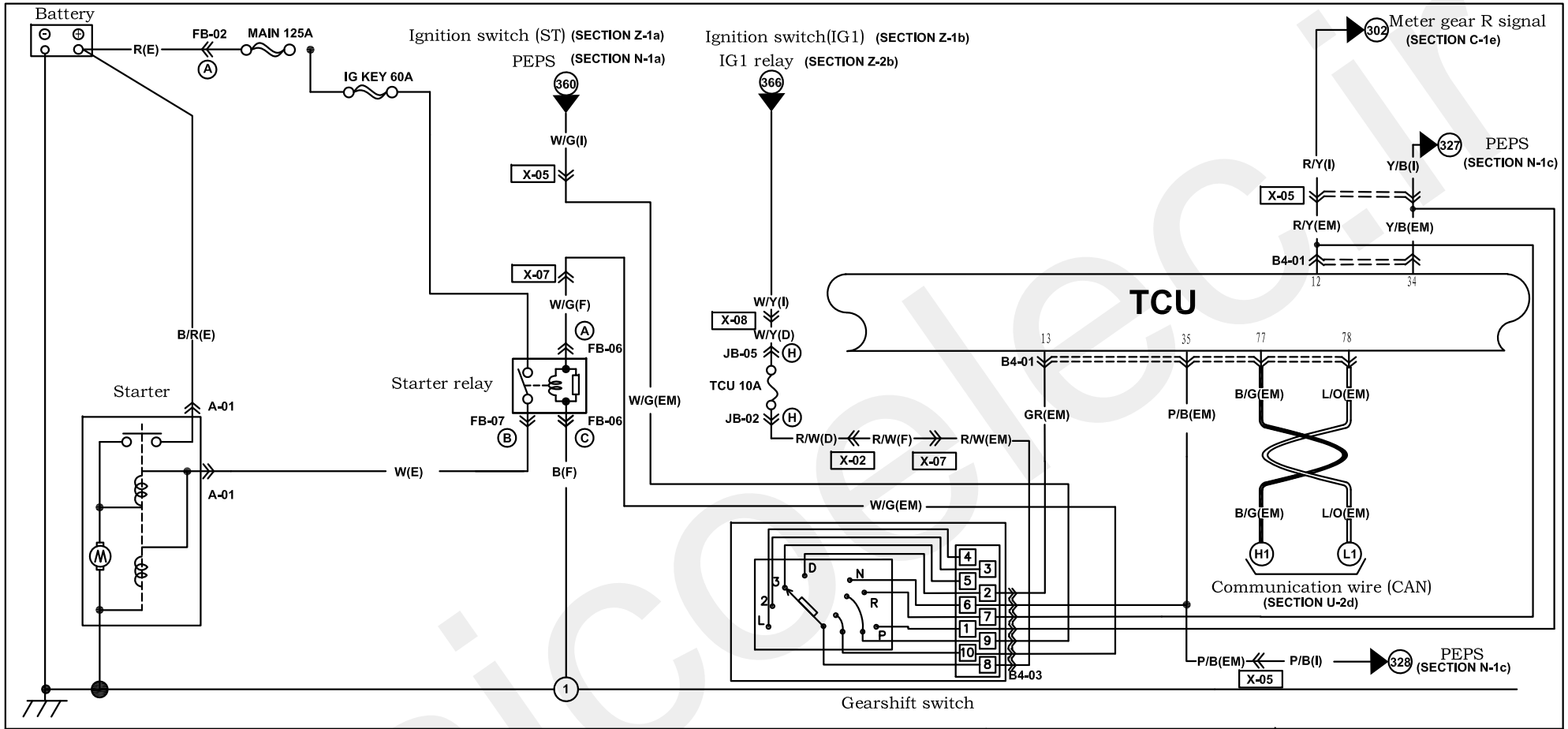

B4-01 TCU(EM)

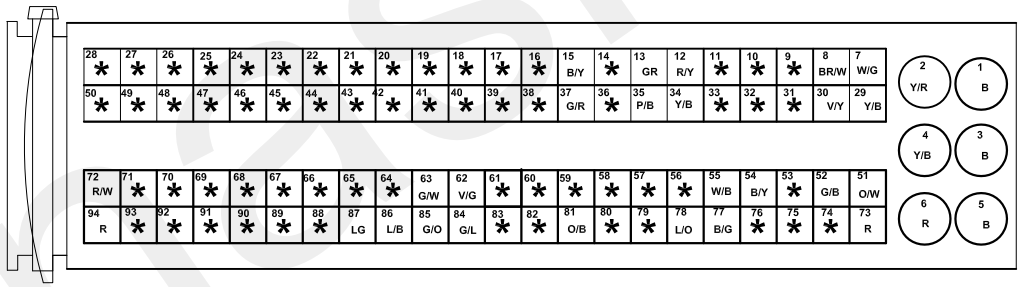

B4-03 Gearshift switch (EM)

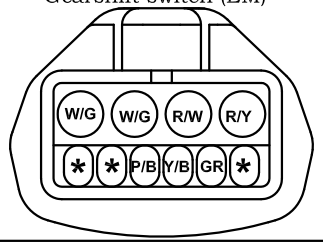

Harness mark: (F) (E) (D) (R)

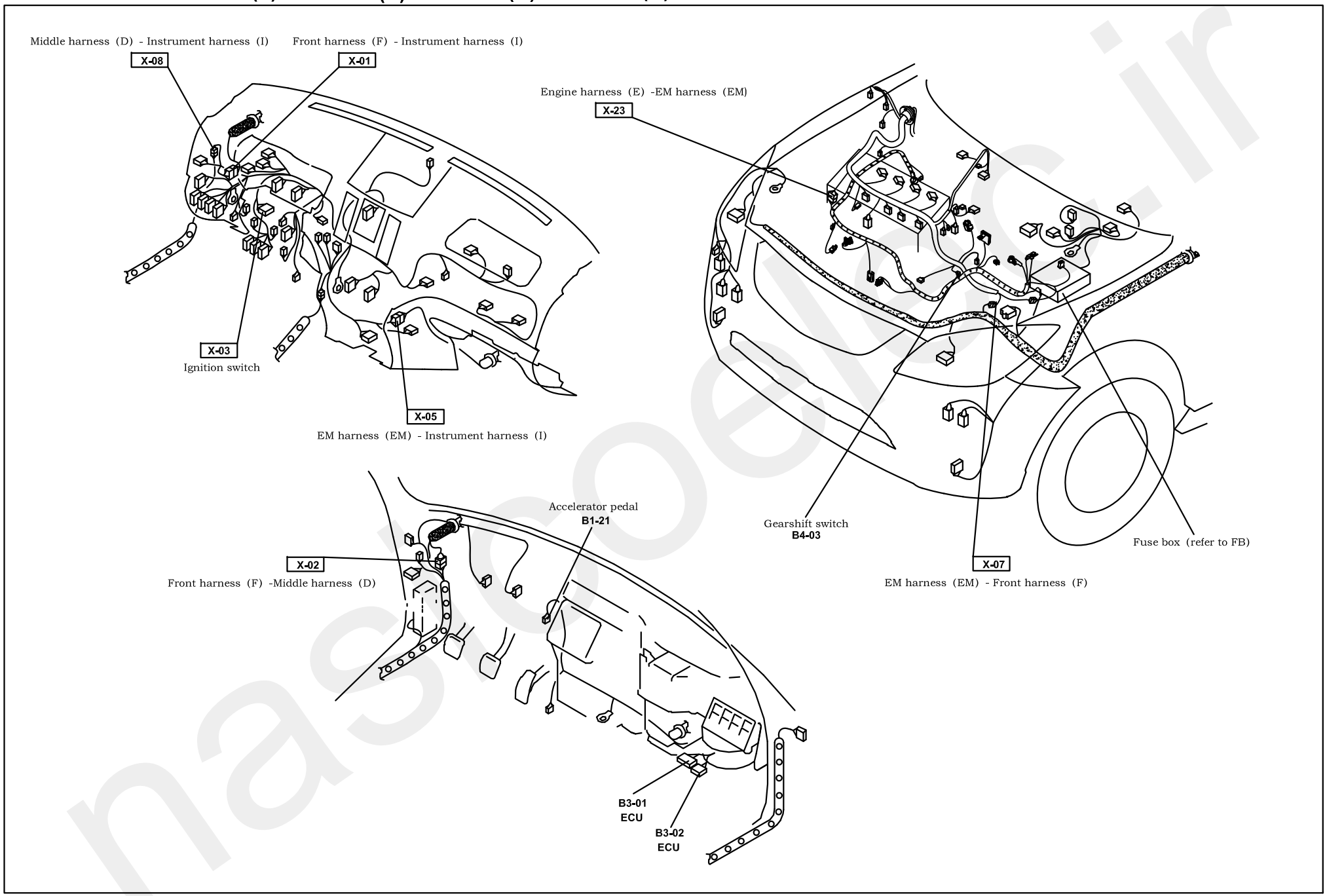

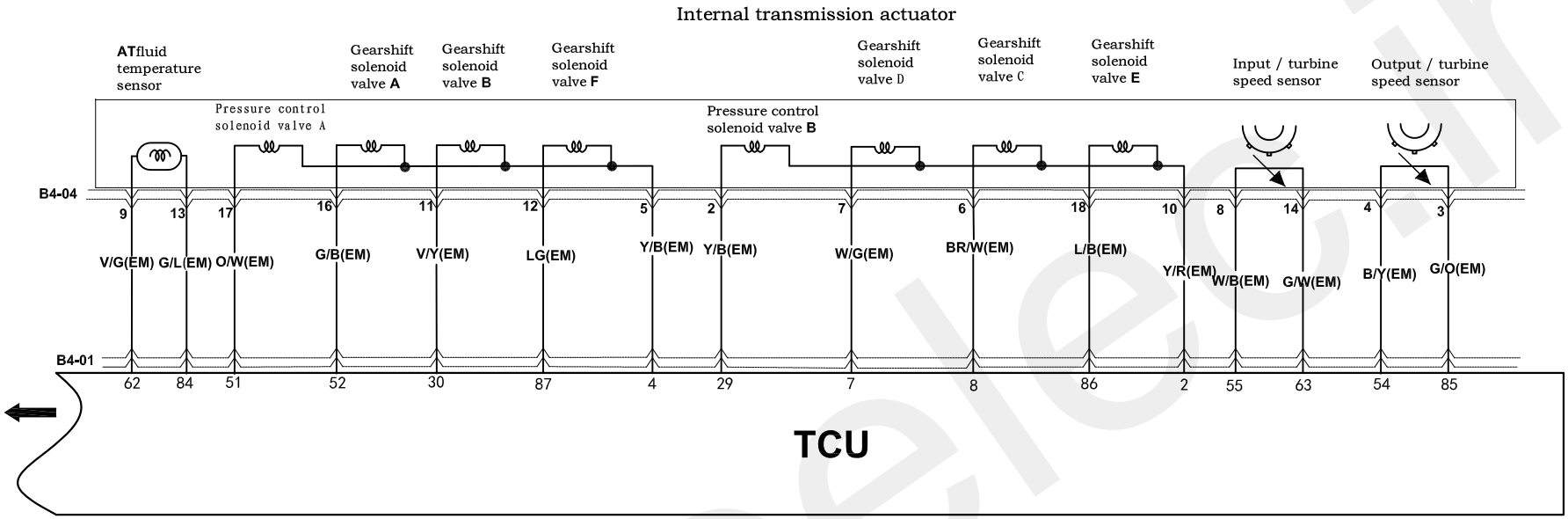

B4-01 TCU(EM)

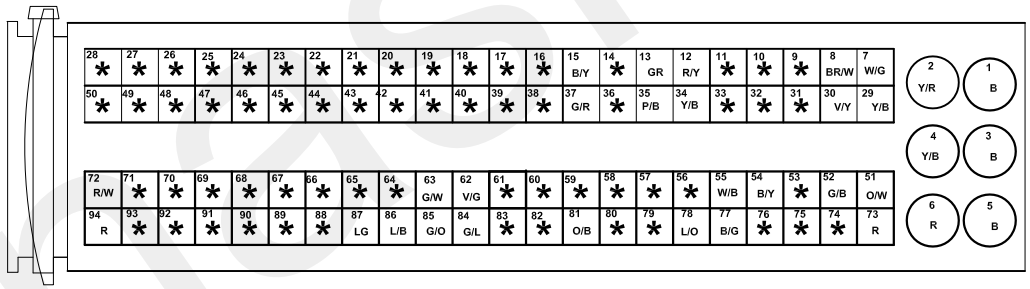

B4-04 AT solenoid valve (EM)

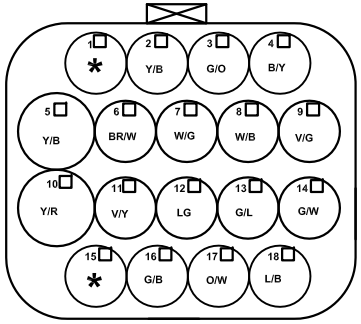

Harness mark: (F) (E) (D) (R)

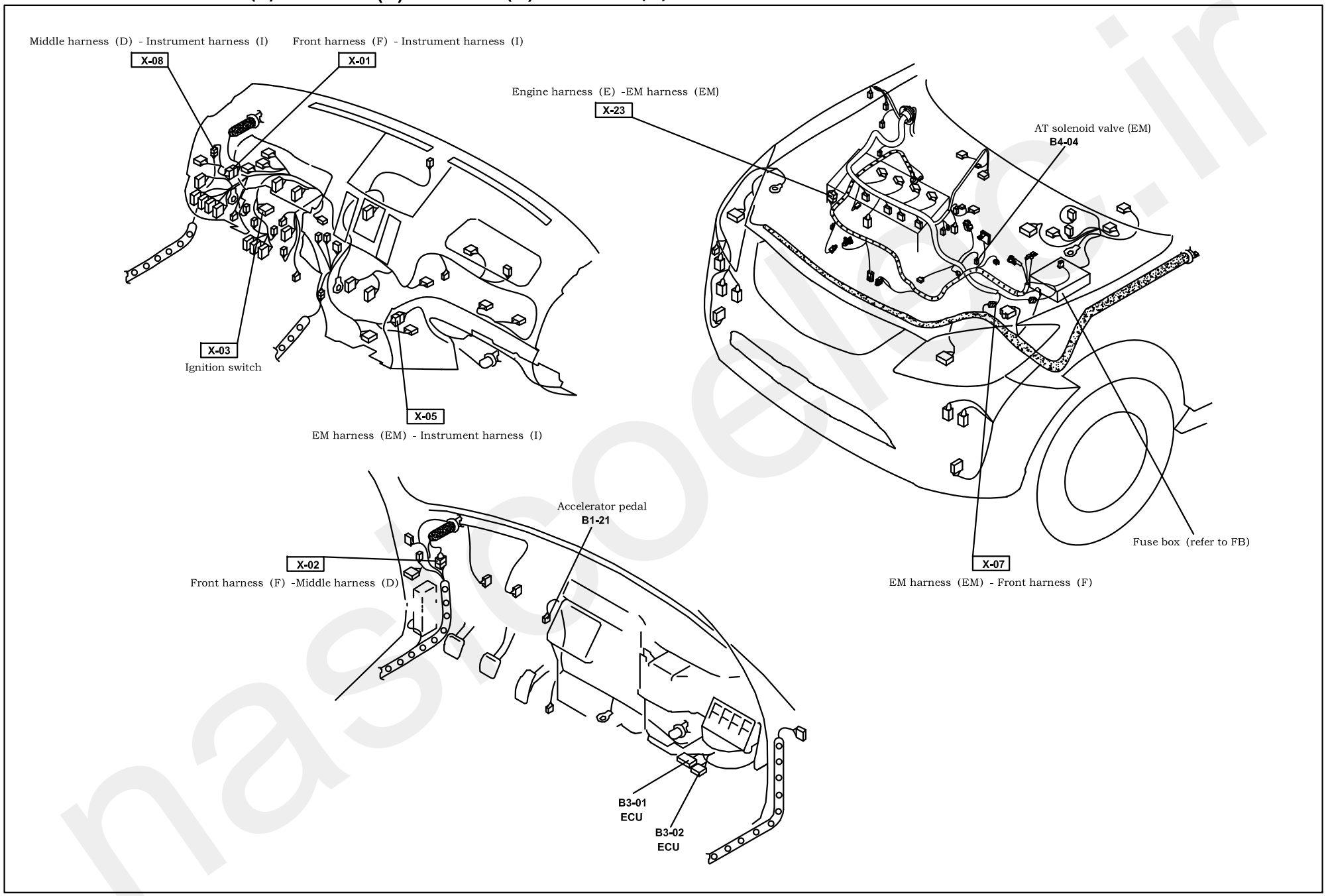

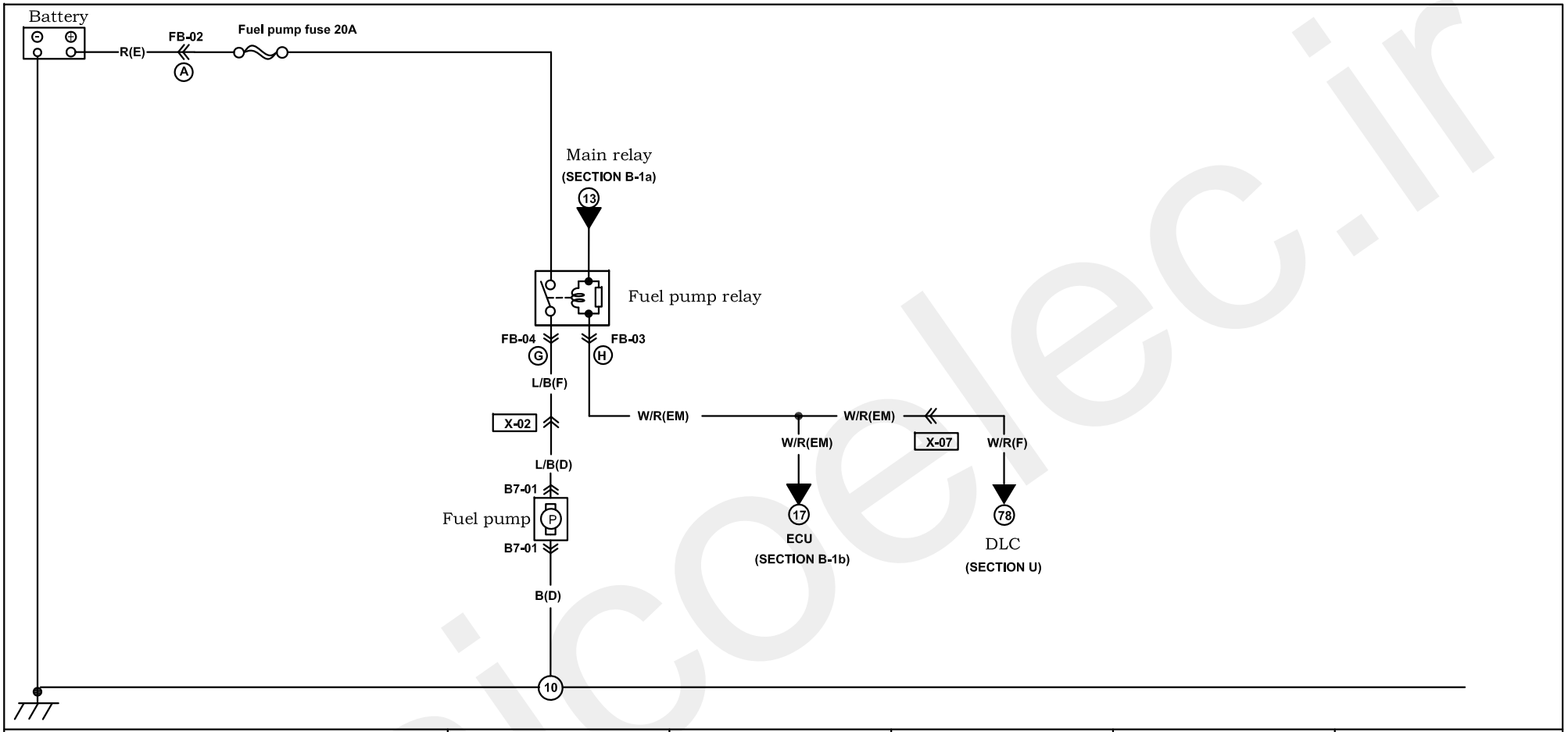

B7-01 Fuel pump (D)

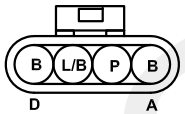

Harness mark: (F) (E) (D) (R)

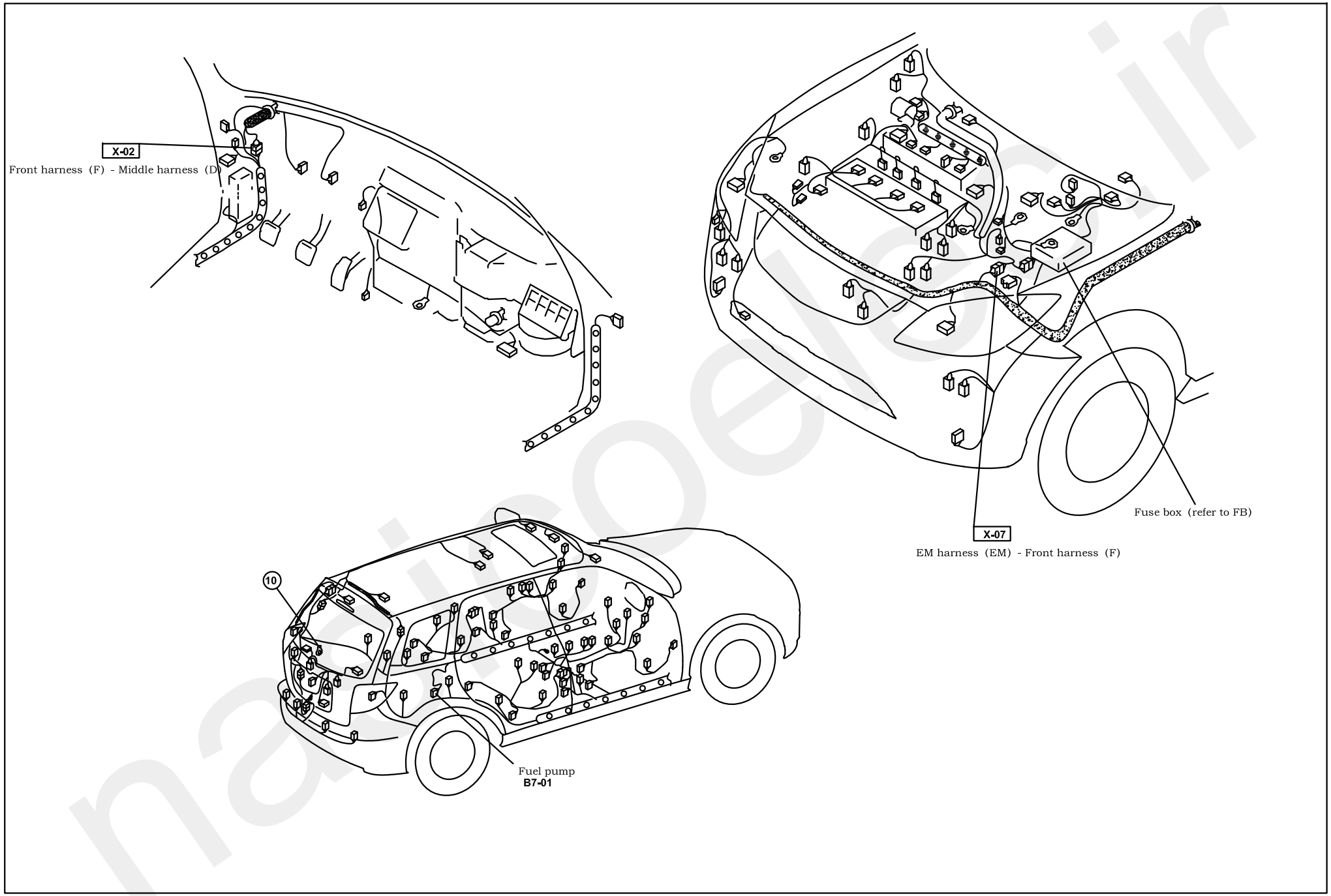

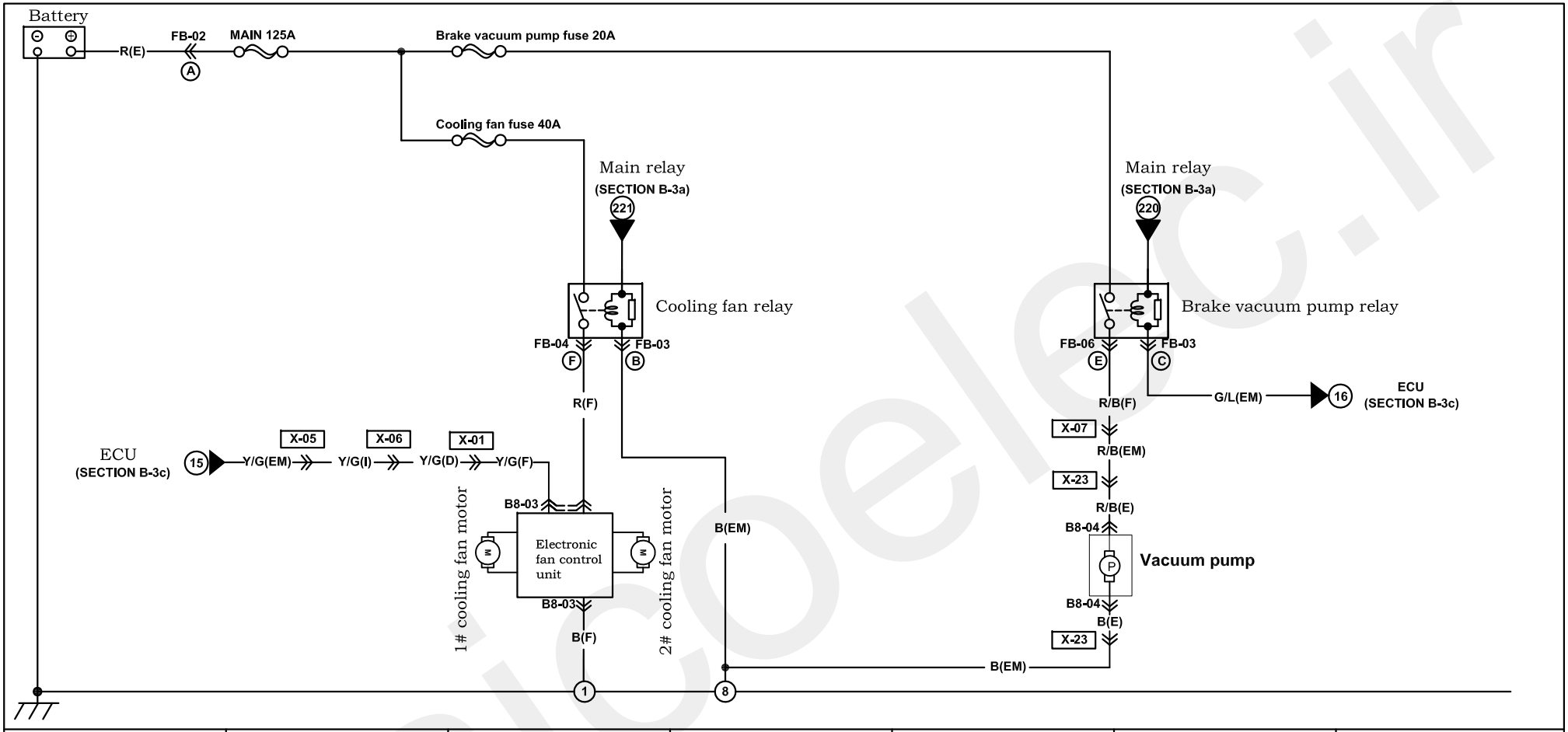

B8-03 Electronic fan control unit(F)	B8-04 Vacuum pump (E)					
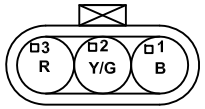	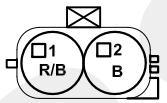					

Harness mark: (F) (E) (D) (R)

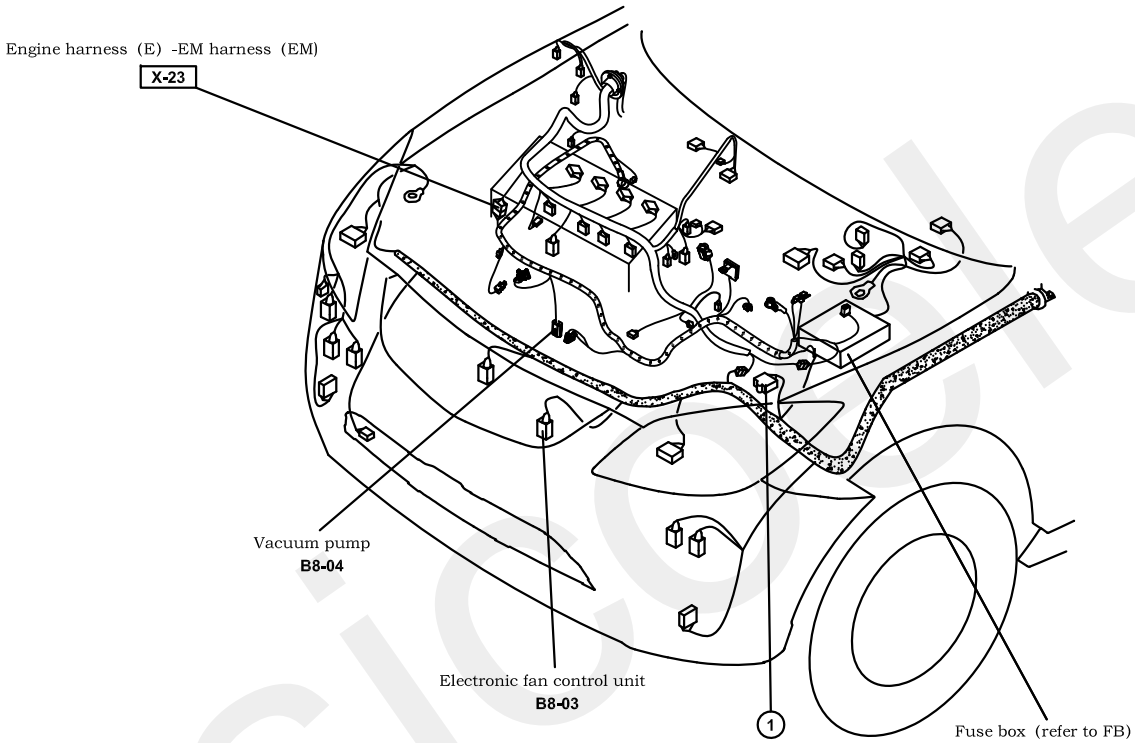

Combined instrument (1.8T)

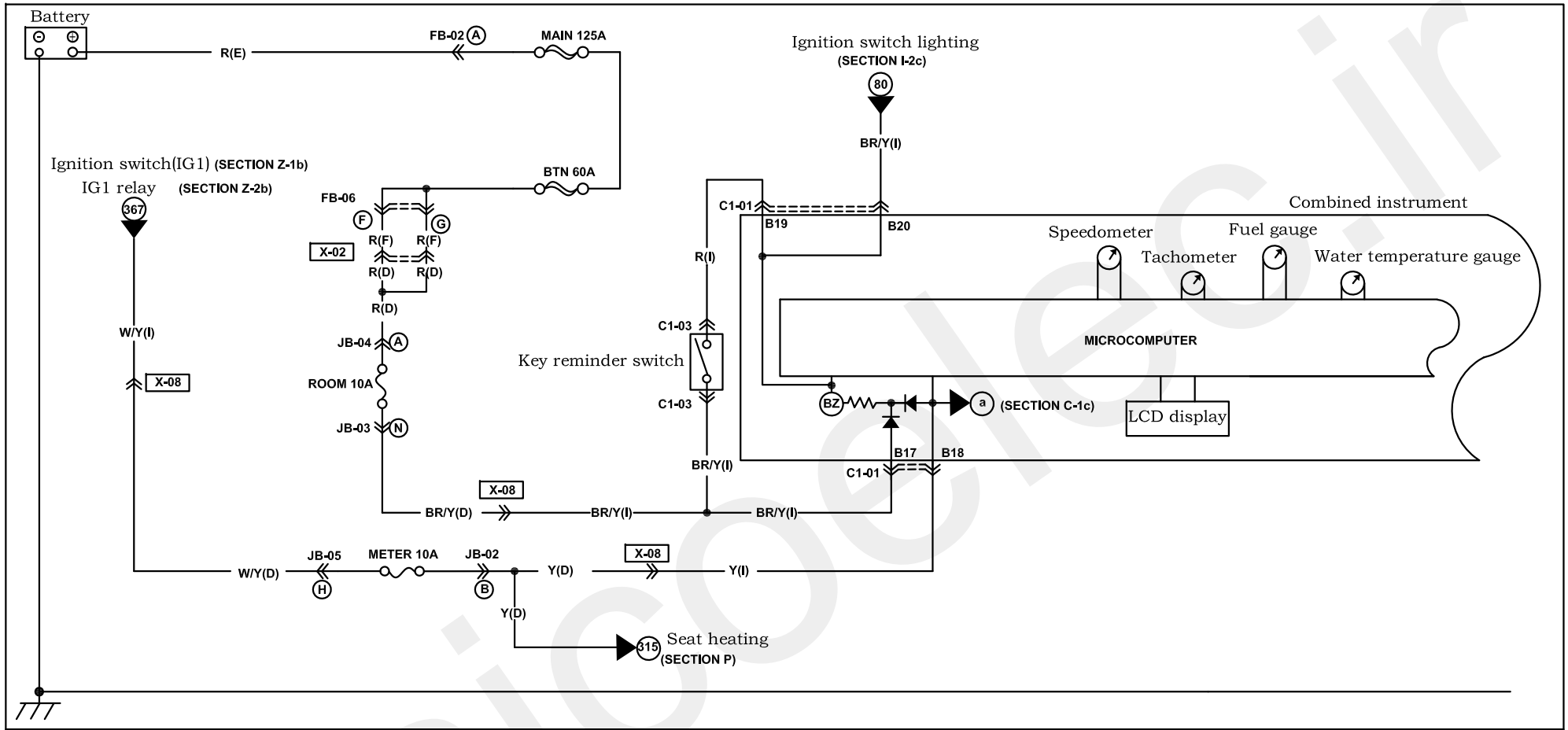

C1-01 Combined instrument (I)

( ) with **ESP**

A1 — A16

B/Y	B/L	B/W	B/R	R/Y	P	Y/G	(G/O)	(V/W)	*	*	*	*	*	*	*
LG	LG/B	*	*	*	*	*	*	*	*	*	G/B	LG/R	G/W	G/R	Y/L

A17 — A32

C1-01 Combined instrument (I)

$ with **PEPS**
@ with ignition switch

B1 — B16

B	B/G	L/O	*	BR/G	$L/B	$L/W	G/Y	B/W	GR	GR/Y	Y/R	BR/W	L/R	V	Y/B
BR/Y	Y	@R	@V/W	BR/B	*	*	*	*	*	*	*	*	*	*	*

B17 — B32

C1-03 Key reminder switch (I)

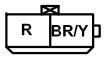

Harness mark: (F) (E) (D) (R)

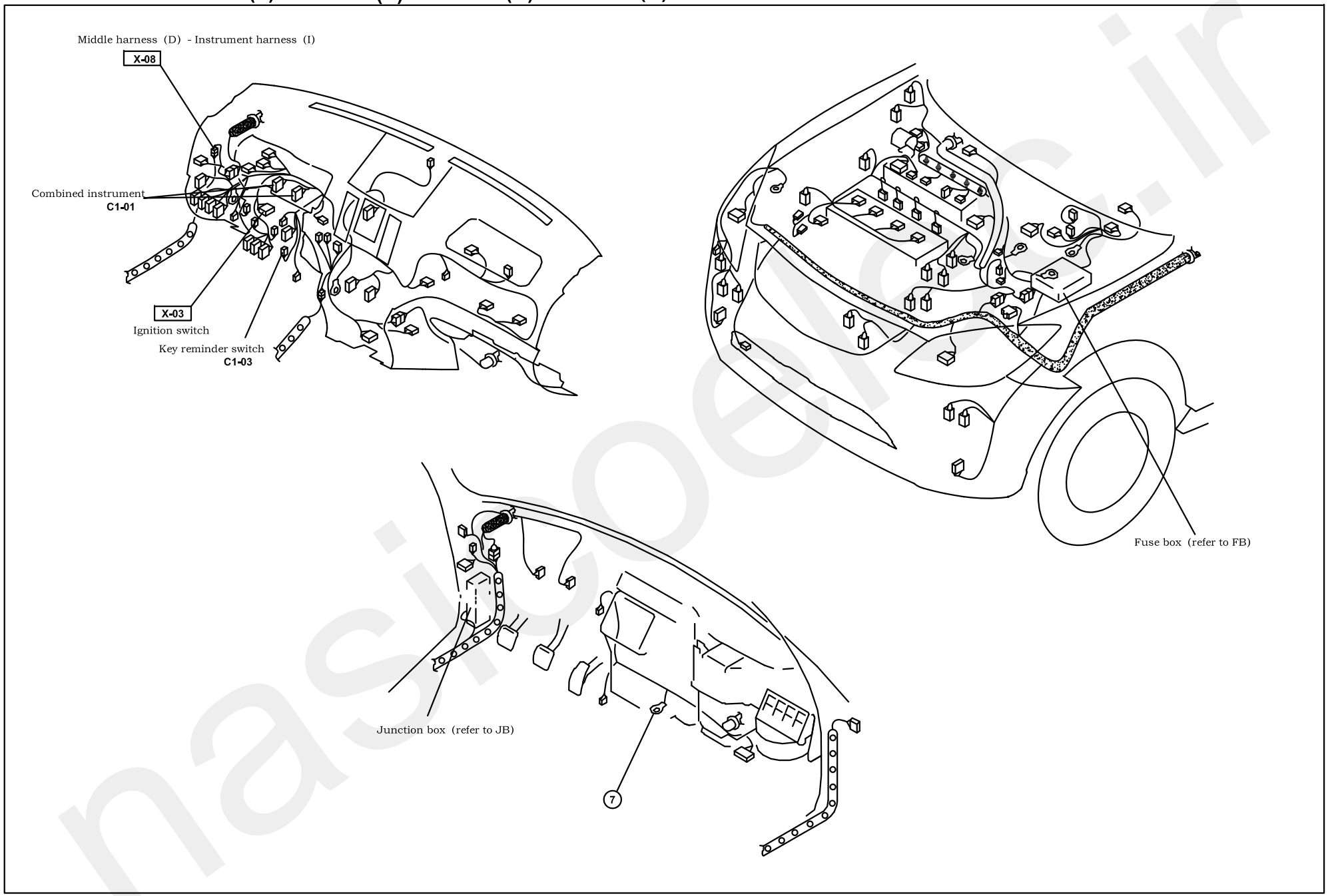

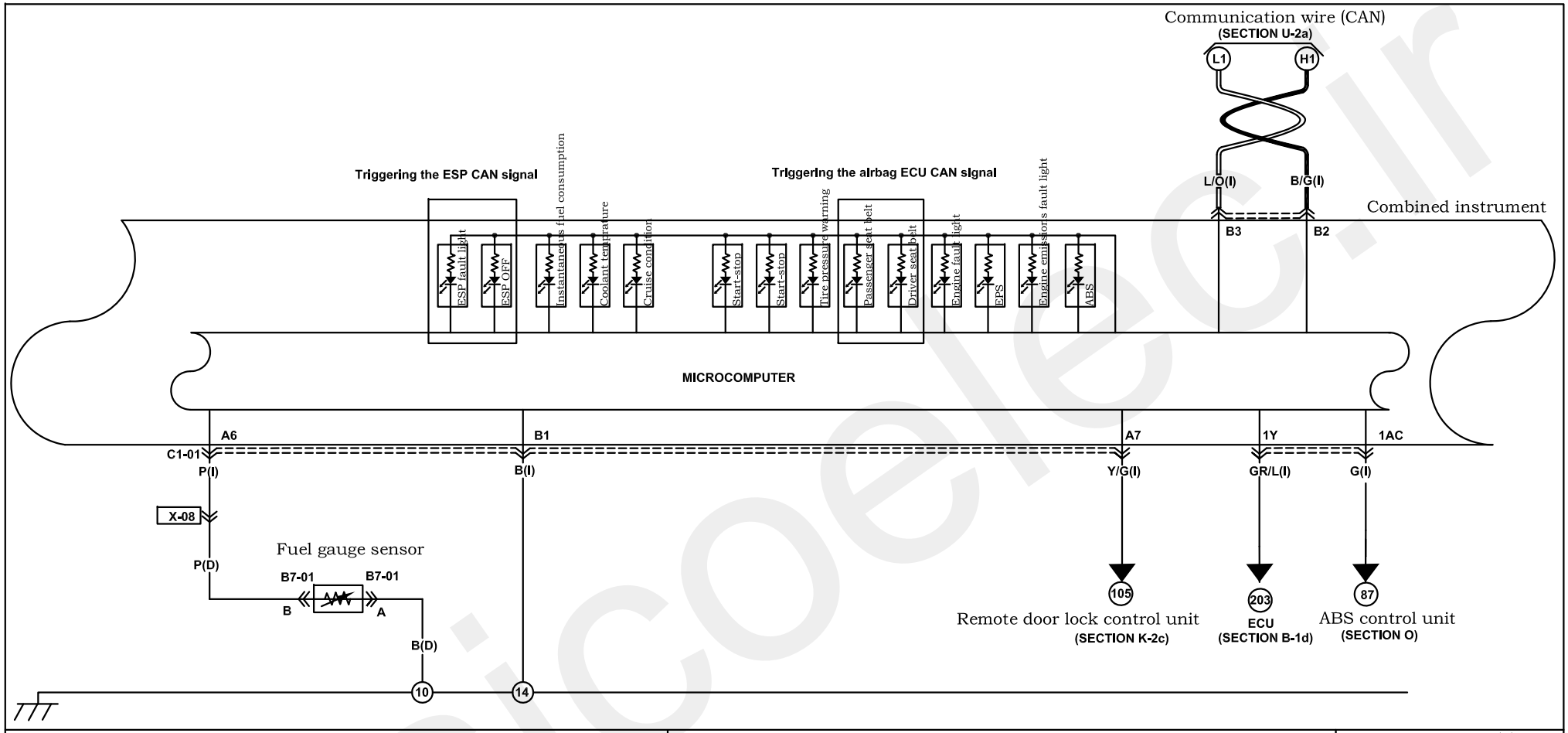

C1-01 Combined instrument (I)

( ) with **ESP**

A1 — A16

B/Y	B/L	B/W	B/R	R/Y	P	Y/G	*	*	*	*	*	*	*	*	*
LG	LG/B	*	*	*	*	*	*	*	*	*	G/B	LG/R	G/W	G/R	Y/L

A17 — A32

C1-01 Combined instrument (I)

$ with **PEPS**
@ with ignition switch

B1 — B16

B	B/G	L/O	*	*	$L/B	$L/W	G/Y	B/W	*	*	Y/R	BR/W	L/R	V	Y/B
BR/Y	Y	@R	@V/W	BR/B	*	*	*	*	*	*	*	*	*	*	*

B17 — B32

B7-01 Fuel gauge sensor (D)

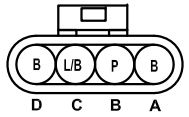

Harness mark: (F) (E) (D) (R)

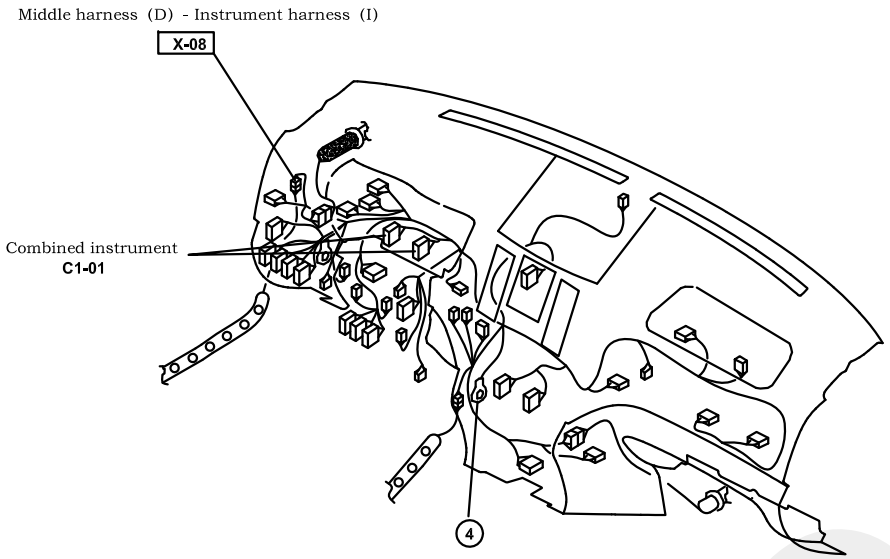

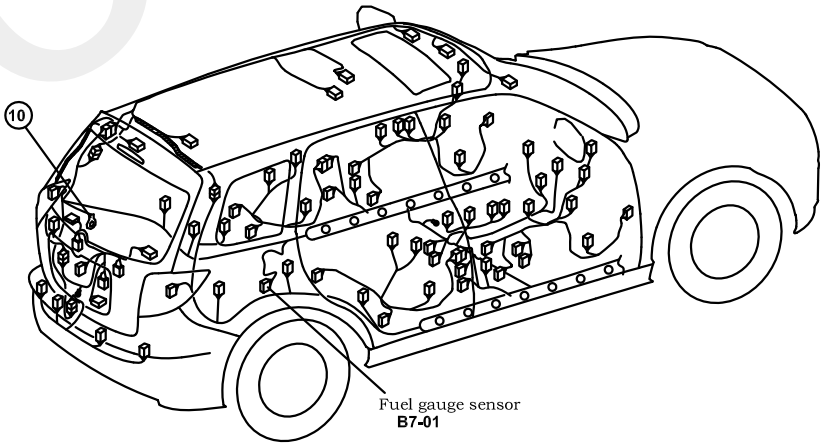

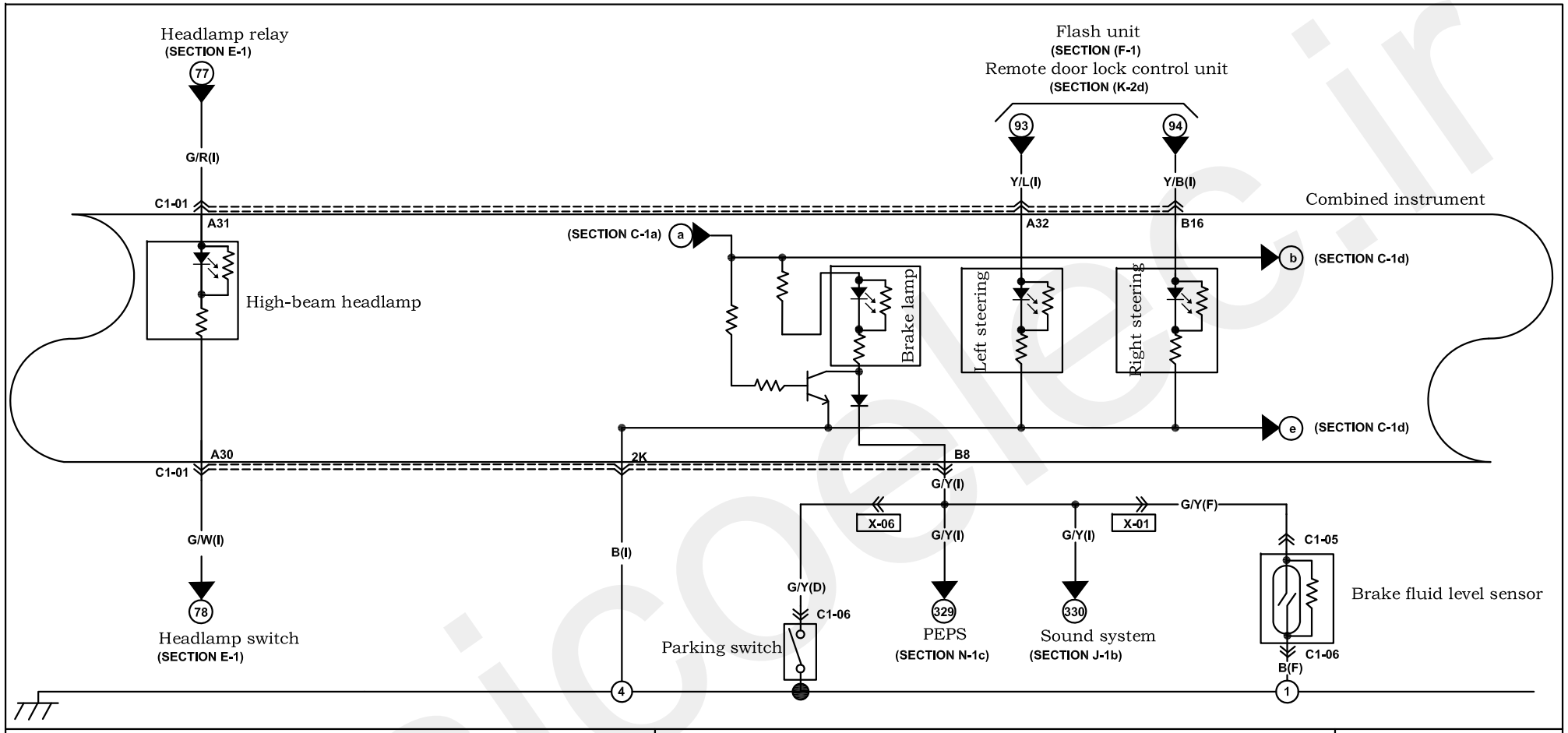

C1-01 Combined instrument (I)

( ) with **ESP**

A1 — A16

B/Y	B/L	B/W	B/R	R/Y	P	Y/G	(G/O)	(V/W)	*	*	*	*	*	*	*
LG	LG/B	*	*	*	*	*	*	*	*	*	G/B	LG/R	G/W	G/R	Y/L

A17 — A32

C1-01 Combined instrument (I)

$ with **PEPS**
@ with ignition switch

B1 — B16

B	B/G	L/O	*	BR/G	$L/B	$L/W	G/Y	B/W	GR	GR/Y	Y/R	BR/W	L/R	V	Y/B
BR/Y	Y	@R	@V/W	BR/B	*	*	*	*	*	*	*	*	*	*	*

B17 — B32

C1-05 Brake fluid level sensor (F)

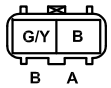

C1-06 Parking switch (D)

Harness mark: (F) (E) (D) (R)

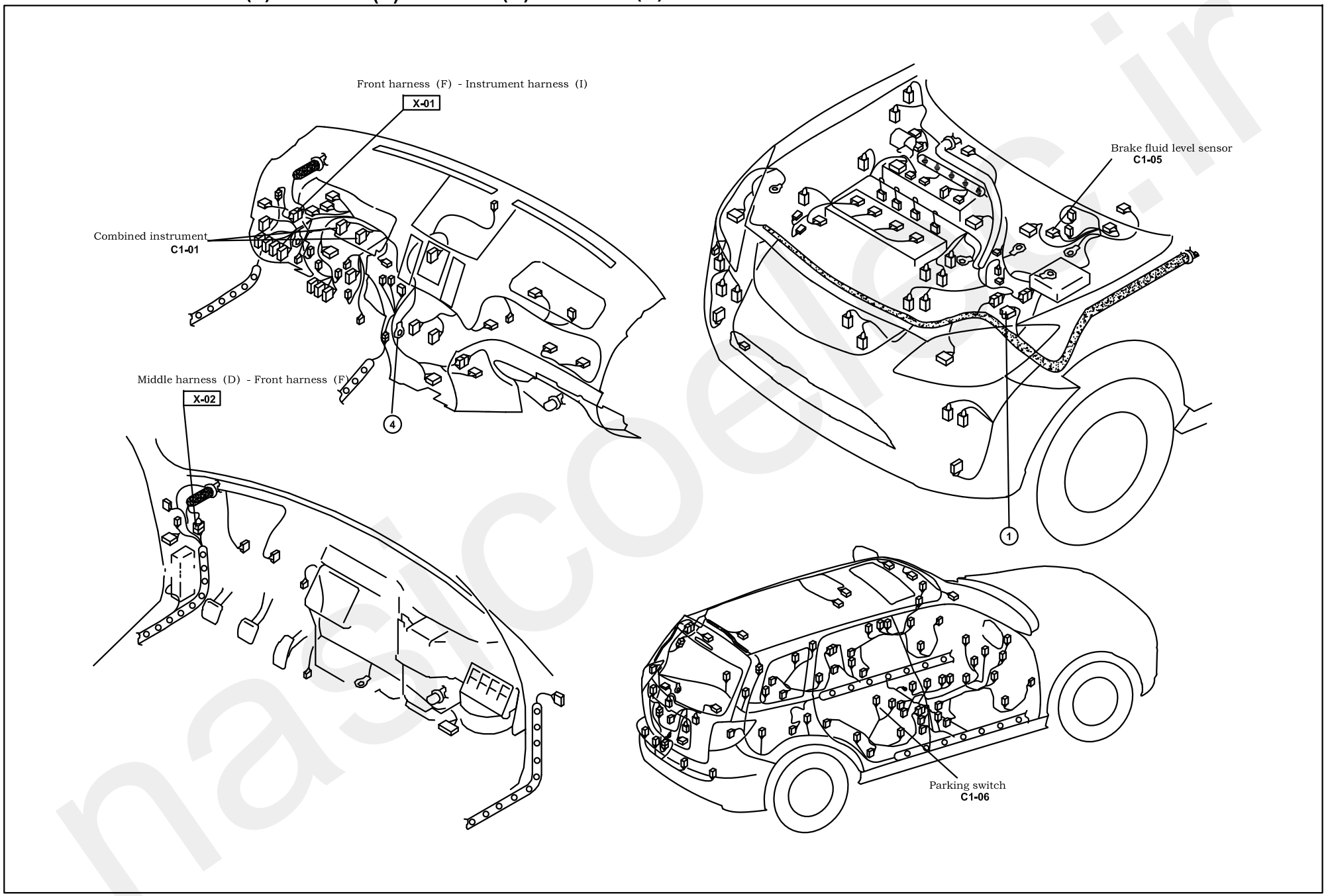

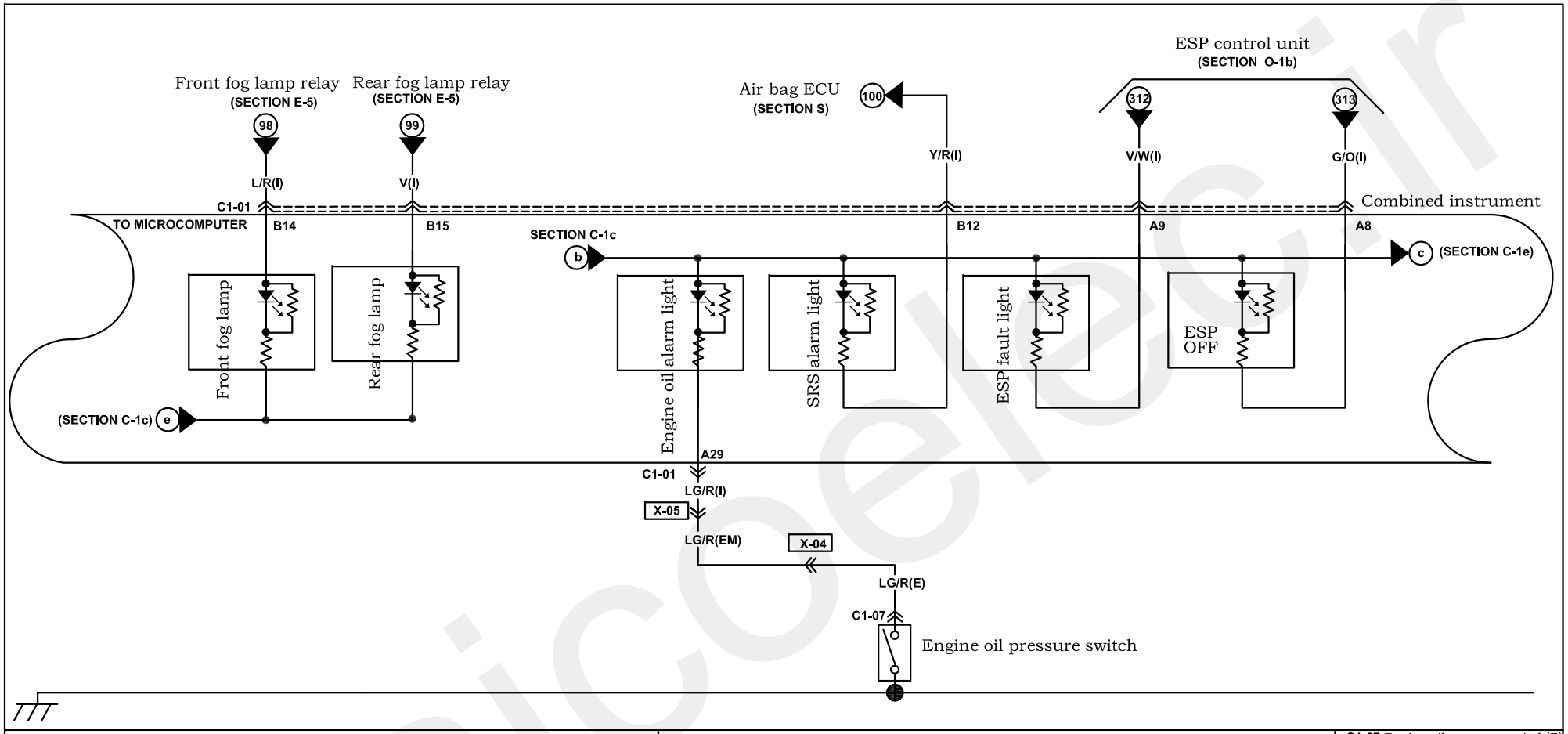

C1-01 Combined instrument (I)

( ) with **ESP**

A1 — A16

B/Y	B/L	B/W	B/R	R/Y	P	Y/G	(G/O)	(V/W)	*	*	*	*	*	*	*
LG	LG/B	*	*	*	*	*	*	*	*	*	G/B	LG/R	G/W	G/R	Y/L

A17 — A32

C1-01 Combined instrument (I)

$ with **PEPS**
@ with ignition switch

B1 — B16

B	B/G	L/O	*	BR/G	$L/B	$L/W	G/Y	B/W	GR	GR/Y	Y/R	BR/W	L/R	V	Y/B
BR/Y	Y	@R	@V/W	BR/B	*	*	*	*	*	*	*	*	*	*	*

B17 — B32

C1-07 Engine oil pressure switch(E)

Harness mark: (F) (E) (D) (R)

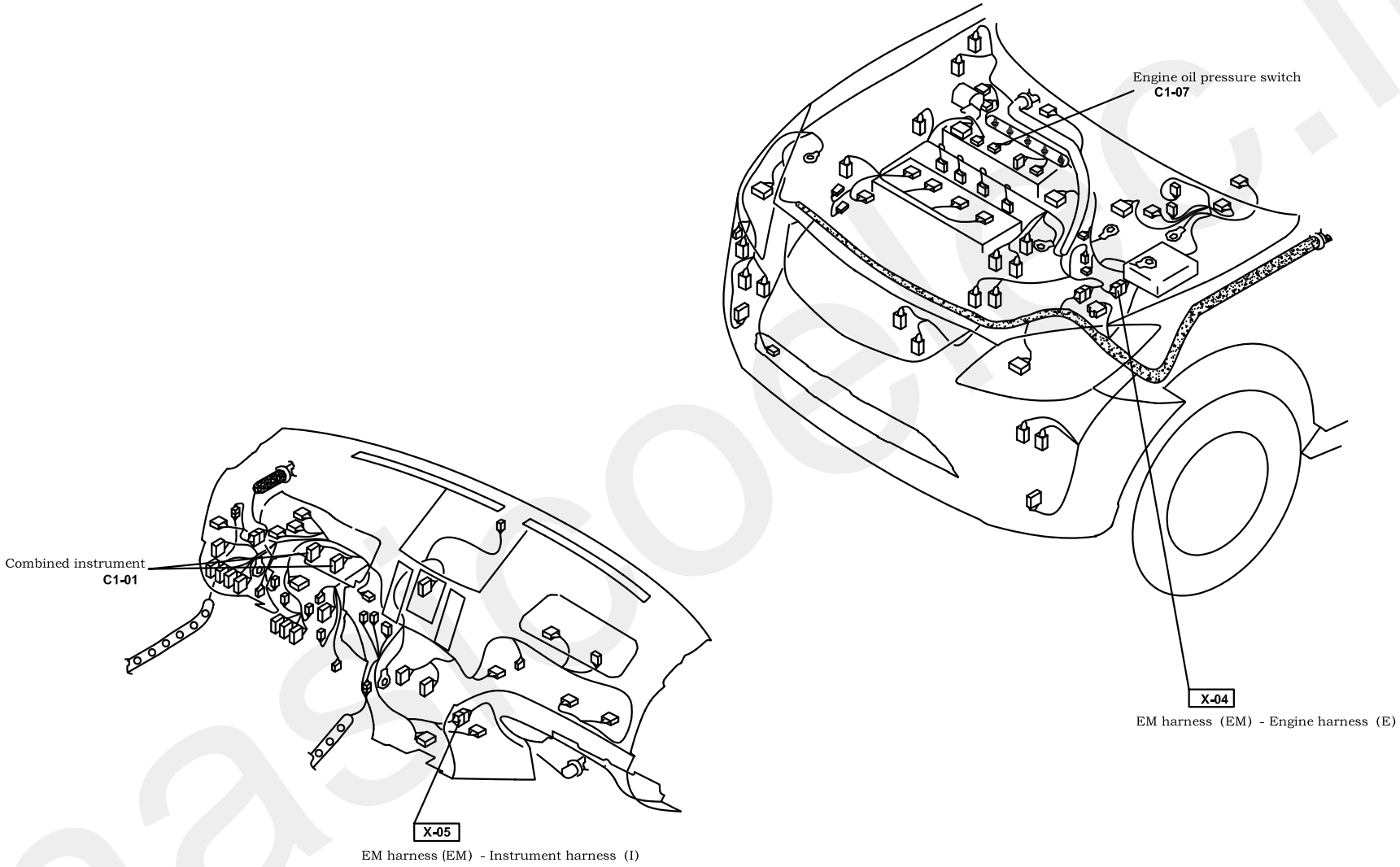

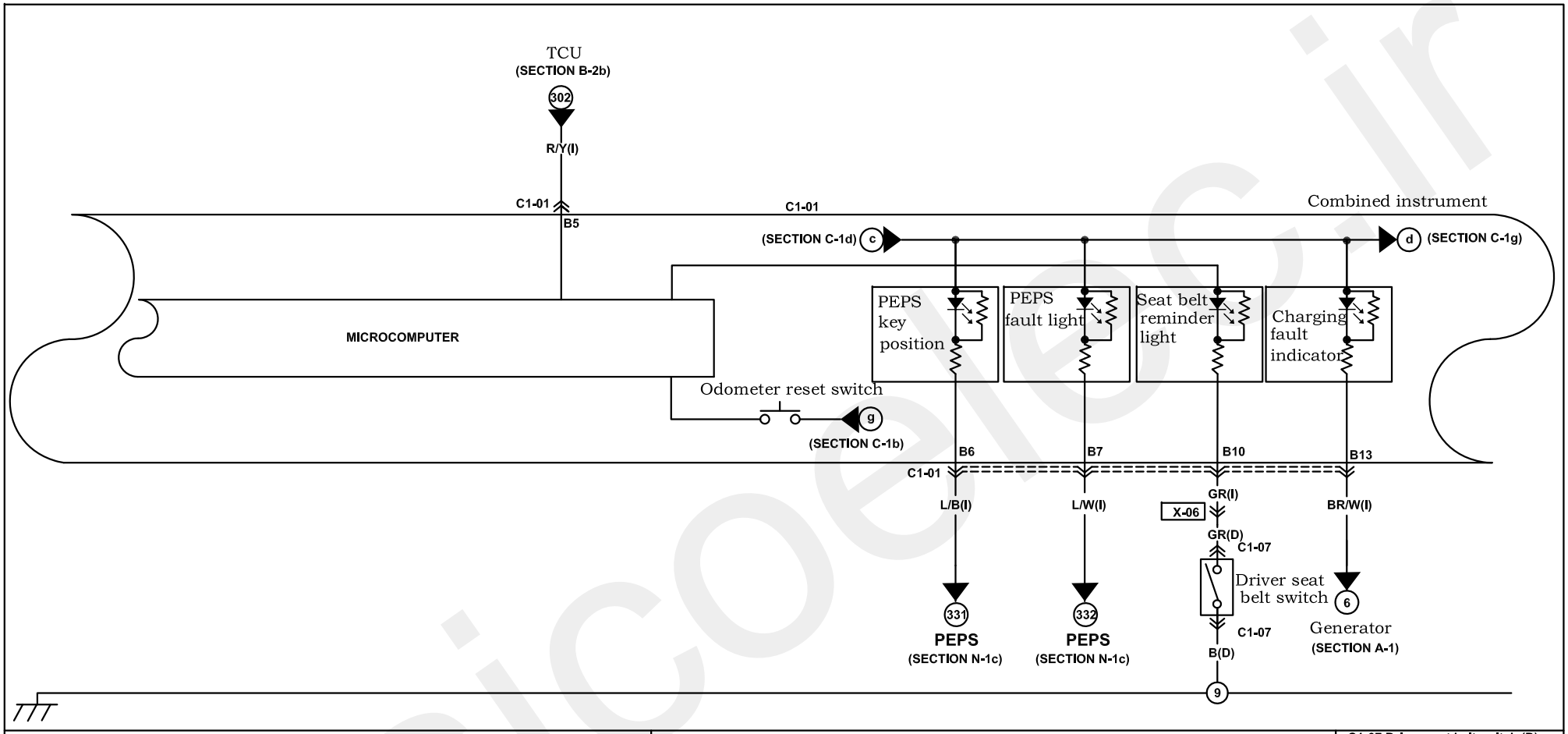

C1-01 Combined instrument (I)

( ) with **ESP**

A1 … A16

B/Y	B/L	B/W	B/R	R/Y	P	Y/G	(G/O)	(V/W)	*	*	*	*	*	*	*
LG	LG/B	*	*	*	*	*	*	*	*	*	G/B	LG/R	G/W	G/R	Y/L

A17 … A32

C1-01 Combined instrument (I)

$ with **PEPS**
@ with ignition switch

B1 … B16

B	B/G	L/O	*	BR/G	$L/B	$L/W	G/Y	B/W	GR	GR/Y	Y/R	BR/W	L/R	V	Y/B
BR/Y	Y	@R	@V/W	BR/B	*	*	*	*	*	*	*	*	*	*	*

B17 … B32

C1-07 Driver seat belt switch (D)

Harness mark: (F) (E) (D) (R)

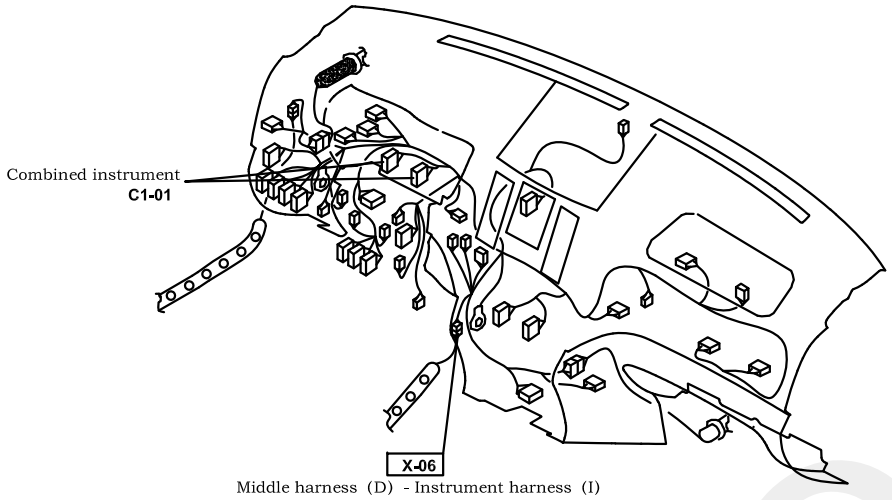

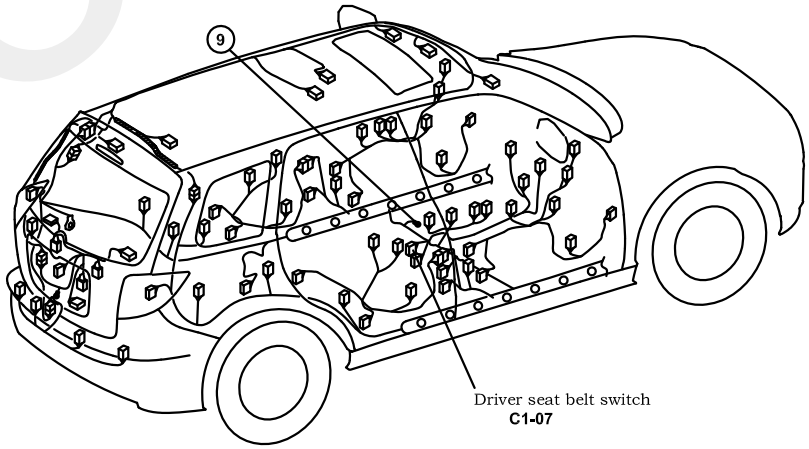

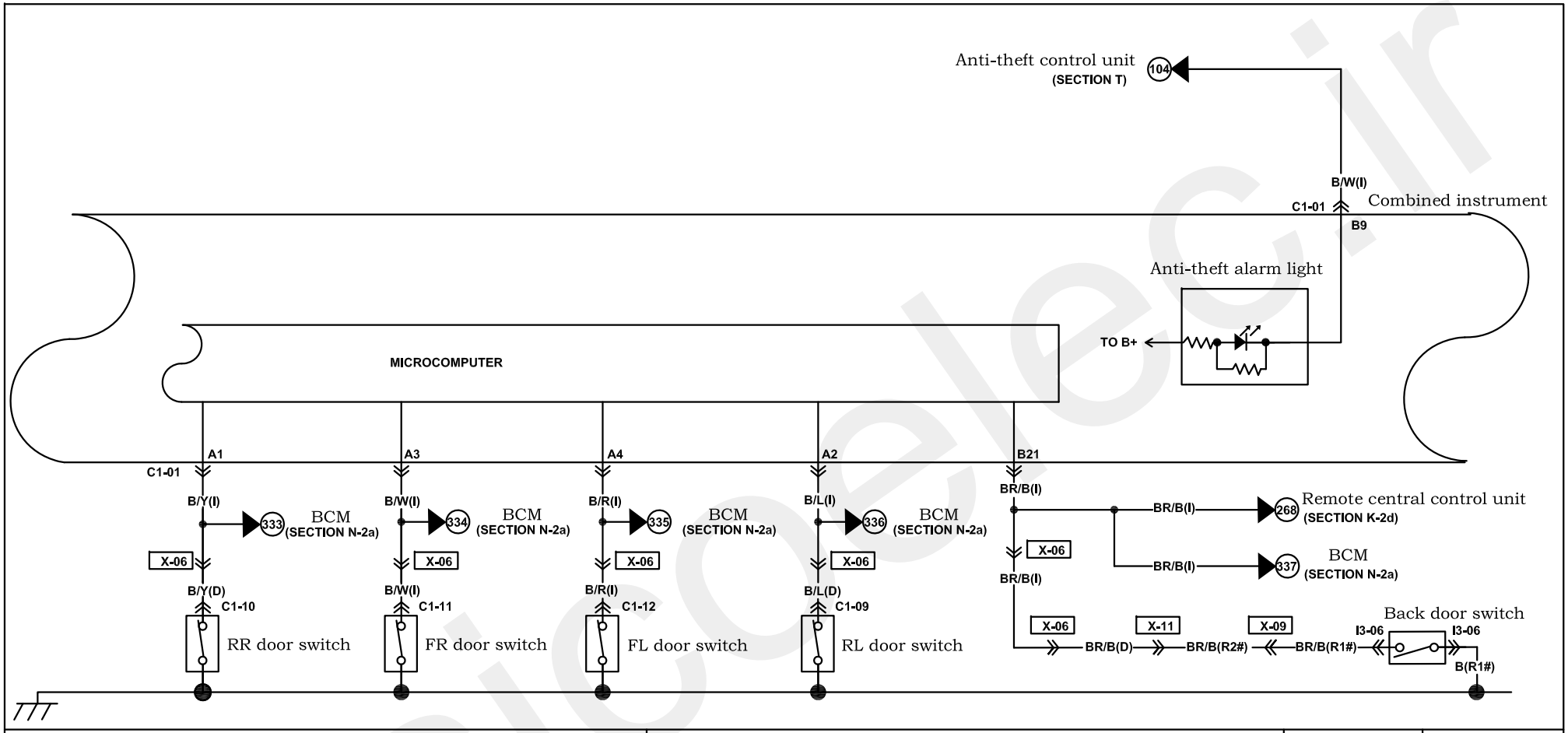

C1-01 Combined instrument (I)

( ) with ESP

A1 — A16

B/Y	B/L	B/W	B/R	R/Y	P	Y/G	(G/O)	(V/W)	*	*	*	*	*	*	*
LG	LG/B	*	*	*	*	*	*	*	*	*	G/B	LG/R	G/W	G/R	Y/L

A17 — A32

C1-01 Combined instrument (I)

$ with PEPS
@ with ignition switch

B1 — B16

B	B/G	L/O	*	BR/G	$L/B	$L/W	G/Y	B/W	GR	GR/Y	Y/R	BR/W	L/R	V	Y/B
BR/Y	Y	@R	@V/W	BR/B	*	*	*	*	*	*	*	*	*	*	*

B17 — B32

C1-10 RR door switch(D)

C1-11 FR door switch(D)

C1-12 FL door switch(D)

C1-09 RL door switch(D)

I3-06 Back door switch (R1#)

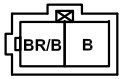

Harness mark: (F) (E) (D) (R)

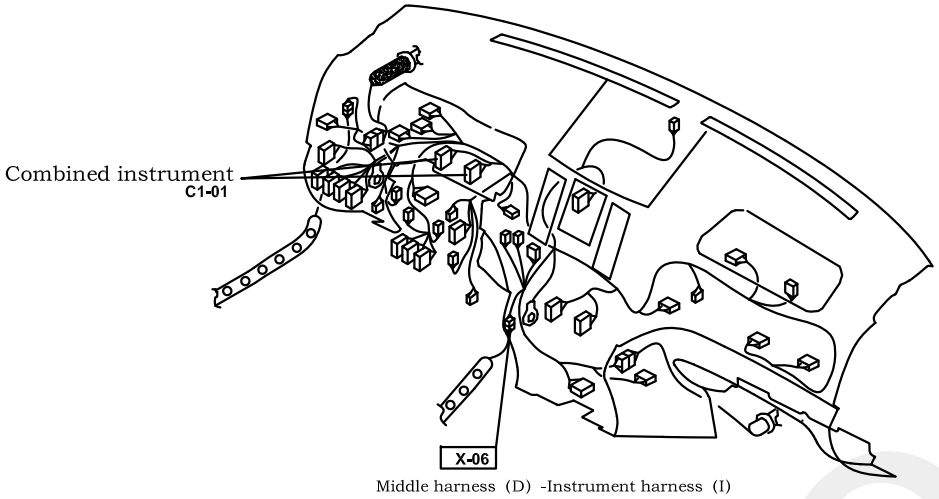

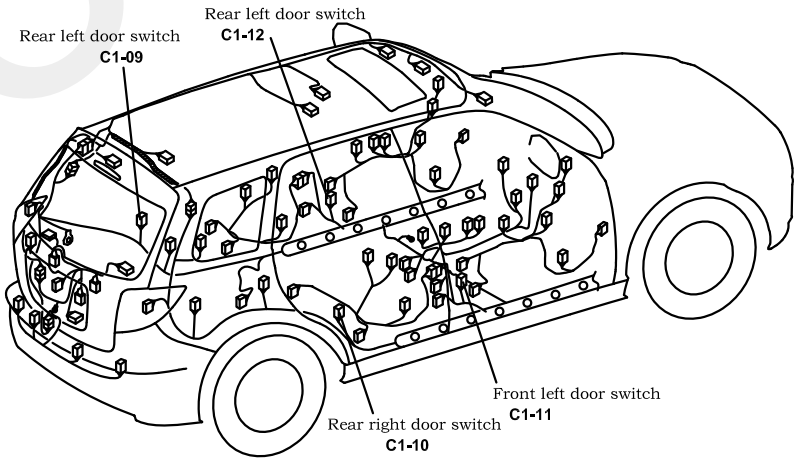

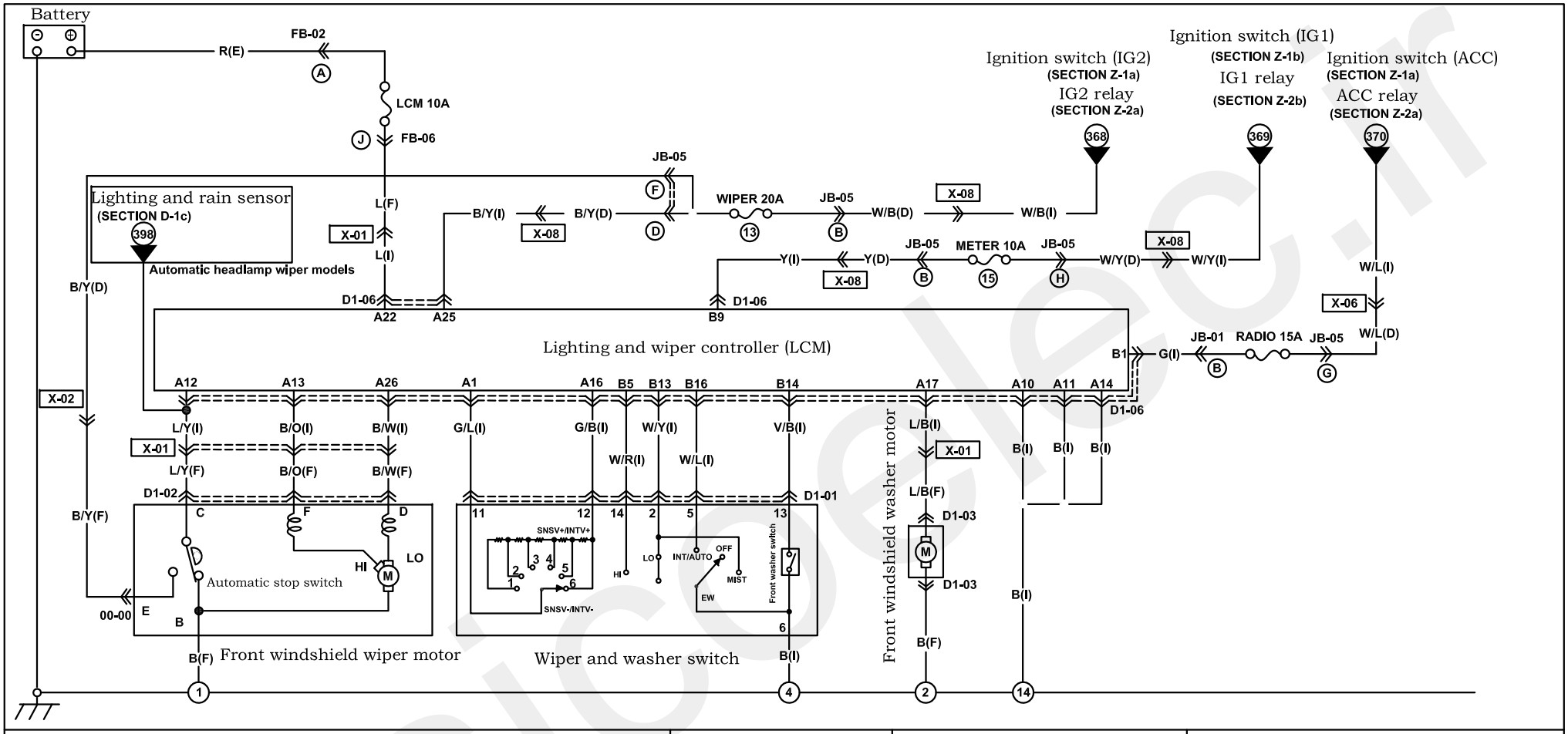

D1-01 Wiper and washer switch (I)

*	V/G	B	W/L	P	V/R	W/Y	*
*	*	W/R	V/B	G/B	G/L	*	*

8 … 1 / 16 … 9

D1-02 Front windshield wiper motor (F)

B/Y	L/Y	*	A
B/O	B/W	B	F

D1-03 Front windshield washer motor (F)

*	B	L/B

D1-06 Lighting and wiper controller (I)

$Automatic headlamp wiper models

A13	B/O	L/Y	B	B	L/O	Y/G	L/G	P/L	$L/Y	BR	$G	G/O	G/L	A1
A26	B/W	B/Y	R/L	V	L	GR	$LG	L/R	LG/R	L/B	G/B	G/W	B	A14

D1-06 Lighting and wiper controller (I)

B8	LG/R	P	V/R	W/R	L/R	L/Y	L	G	B1
B16	W/L	V/G	V/B	W/Y	L/W	LG	L/B	Y	B9

Harness mark: (F) (E) (D) (R)

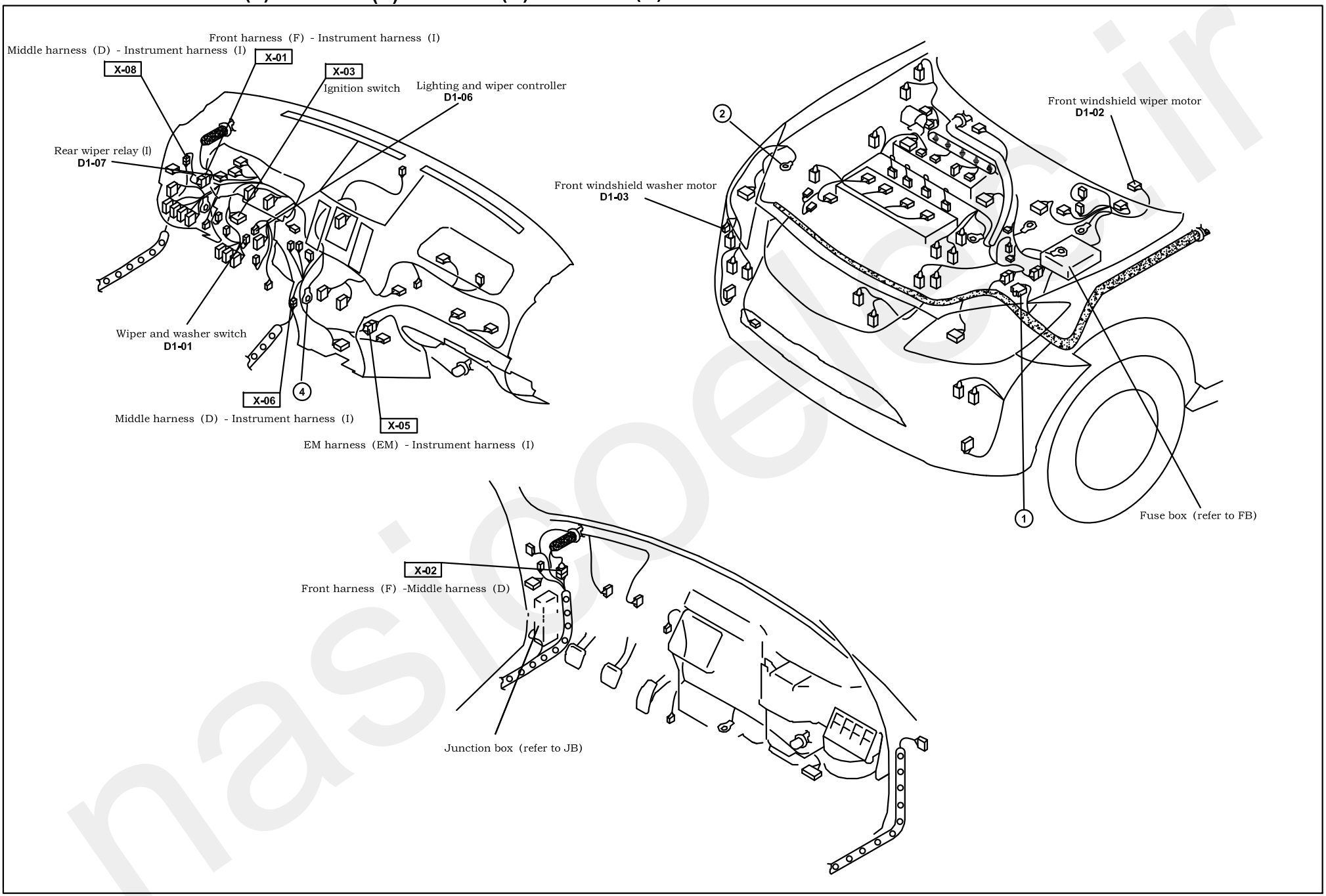

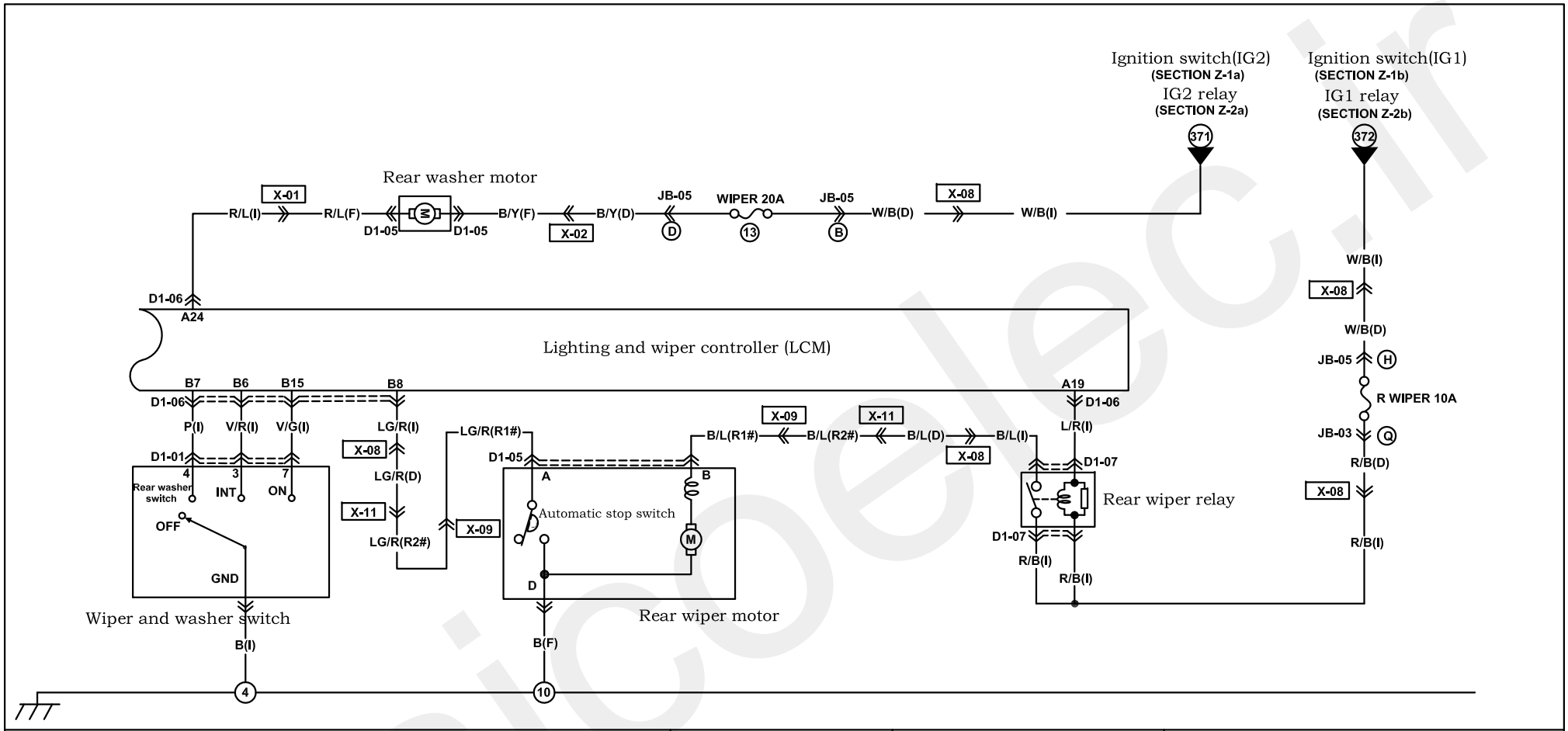

D1-01 Wiper and washer switch (I)

8							1
*	V/G	B	W/L	P	V/R	W/Y	*
*	*	W/R	V/B	G/B	G/L	*	*
16							9

D1-04 Rear-window wiper motor

*	LG/R
B	B/L

D1-05 Rear-window washer motor (F)

B/Y
R/L

D1-07 Rear wiper relay (I)

B/L	
R/B	
L/R	R/B

D1-06 Lighting and wiper controller (I)

A13	B/O	L/Y	B	B	L/O	Y/G	L/G	P/L	*	BR	*	G/O	G/L	A1
A26	B/W	B/Y	R/L	V	L	GR	*	L/R	LG/R	L/B	G/B	G/W	B	A14

D1-06 Lighting and wiper controller (I)

B1	G	L	L/Y	L/R	W/R	V/R	P	LG/R	B8
B9	Y	L/B	LG	L/W	W/Y	V/B	V/G	W/L	B16

Harness mark: (F) (E) (D) (R)

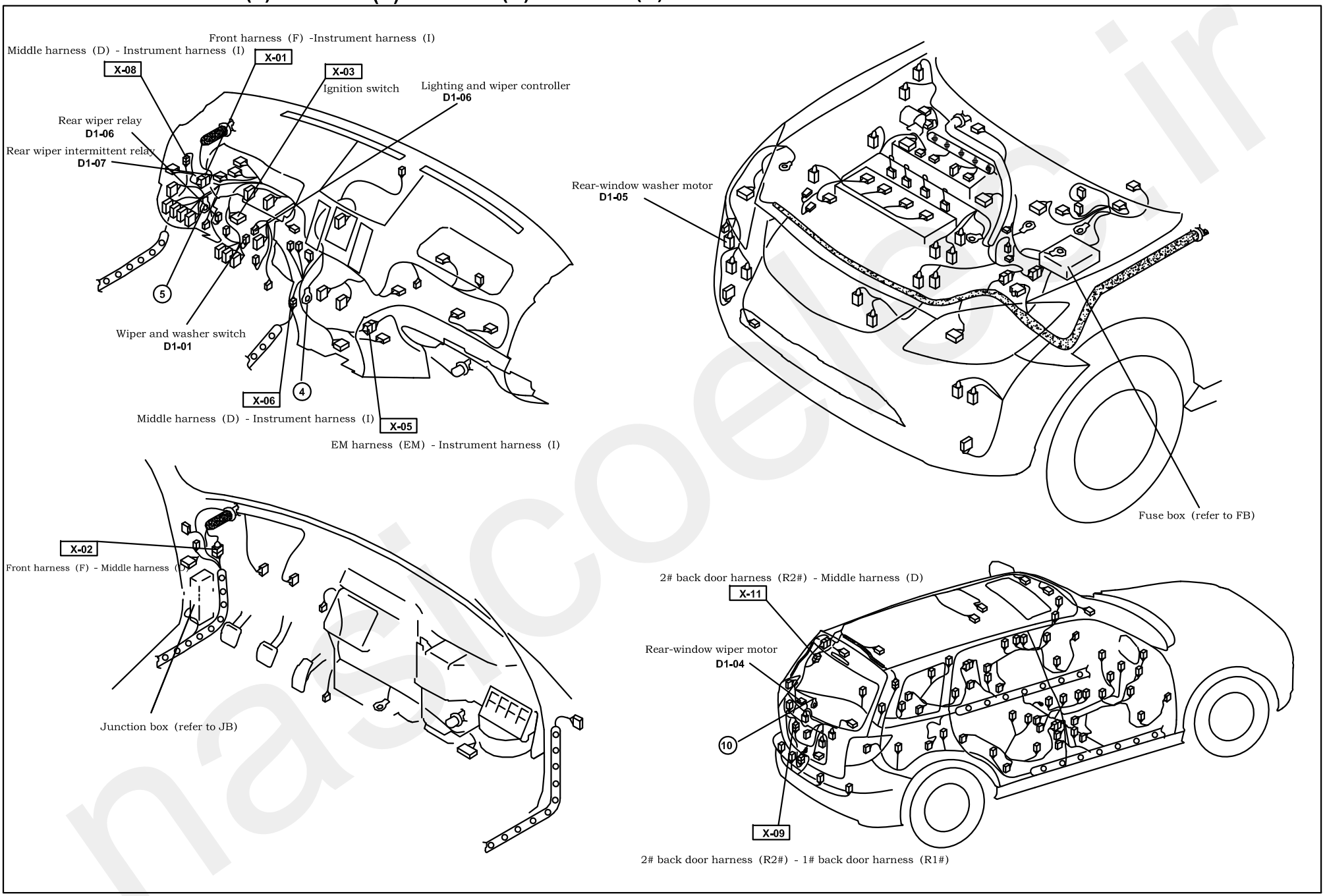

Windshield wiper and washer (automatic)

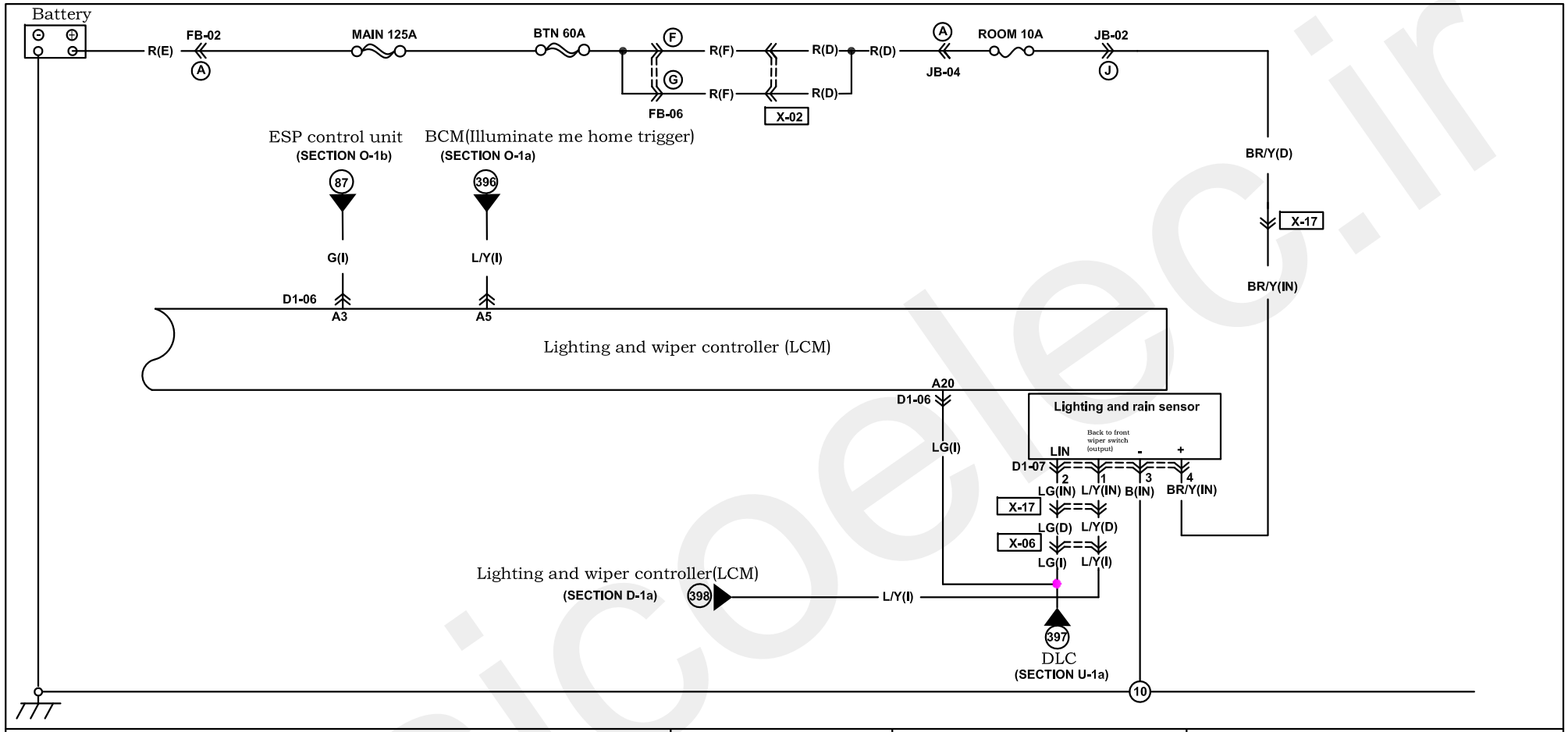

D1-01 Wiper and washer switch (I)

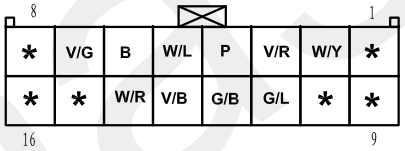

D1-02 Front windshield wiper motor (F)

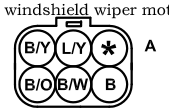

D1-03 Front windshield washer motor (F)

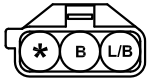

D1-07 Lighting and rain sensor (IN)

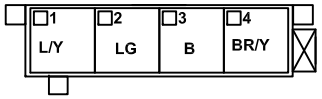

D1-06 Lighting and wiper controller (I)

$Automatic headlamp wiper models

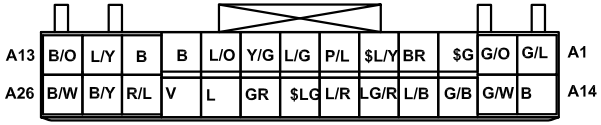

D1-06 Lighting and wiper controller (I)

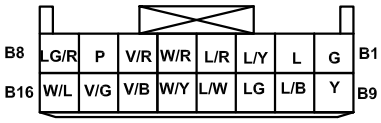

Harness mark: (F) (E) (D) (R)

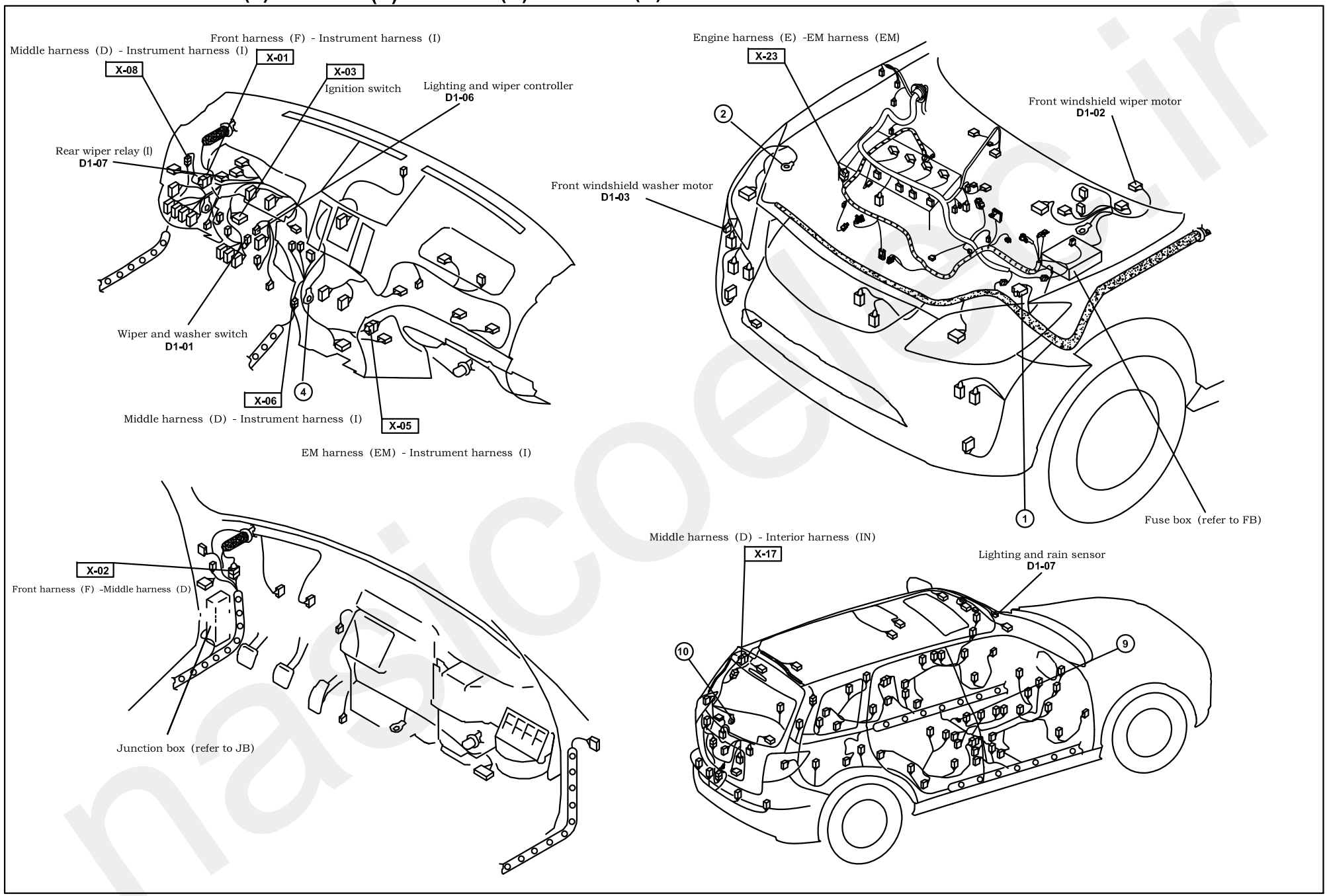

Battery
R(E)
FB-02
A
Position lamp fuse15A
Front fog lamp fuse 15A
13
TNS relay
Headlamp relay
D
FB-04
B
LG(F)
X-01
BR(F)
BR(I)
G/O(I)
G/O(F)
FB-04
I
Headlamp high-beam fuse 15A FB-05
K
headlamp low-beam fuse 15A
D
G/R(F)
G/B(F)
Front position lamp
(SECTION E-7)
110
LG(F)
Power seat and seat heating
(SECTION P)
316
LG(D)
LG(F)
X-02
License plate lamp
Position lamp
Tail lamp
(SECTION E-7)
109
LG(D)
LG(F)
LG(F)
X-02
Illumination
(SECTION I-2a/I-2c)
112
LG(I)
LG(I)
X-01
A4
A2
D1-06
Lighting and wiper controller (LCM)
A15
G/W(I)
B11
B3
B12
B4
D1-06
LG(I)
L/Y(I)
L/W(I)
L/R(I)
E1-01
9
8
6
10
TNS
OFF
HI
LO
Overtaking flash
Headlamp
7
Headlamp switch
E1-01
B(I)
4
Headlamp beam level adjusting switch
(SECTION E-2)
Combined instrument
(SECTION C-1C)
77
113
78
G/R(I)
G/B(F)
G/W(I)
X-01
G/W(I)
G/B(F)
G/R(F)
G/B(F)
G/R(F)
X-01
Left headlamp
Right headlamp
I
E
E1-02
E1-03
55W
55W
H
G
G/W(F)
B(F)
1
2

E1-01 Headlamp switch (I)

6	L/W	*	L/O	L/G	L/B	L	1
12	*	*	L/R	LG	L/Y	B	7

E1-02 Left headlamp (F)

M K I E C A
G/B B G/B G/W G/R * *
P LG GR B B Y/L *
N L J F D B

E1-03 Right headlamp (F)

M K I E C A
G/B B G/B G/W G/R * *
P LG GR B B Y/L *
N L J F D B

Harness mark: (F) (E) (D) (R)

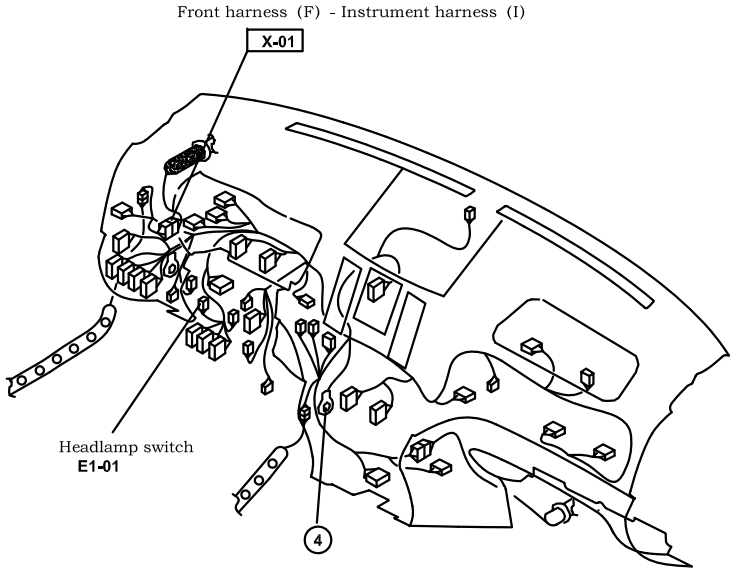

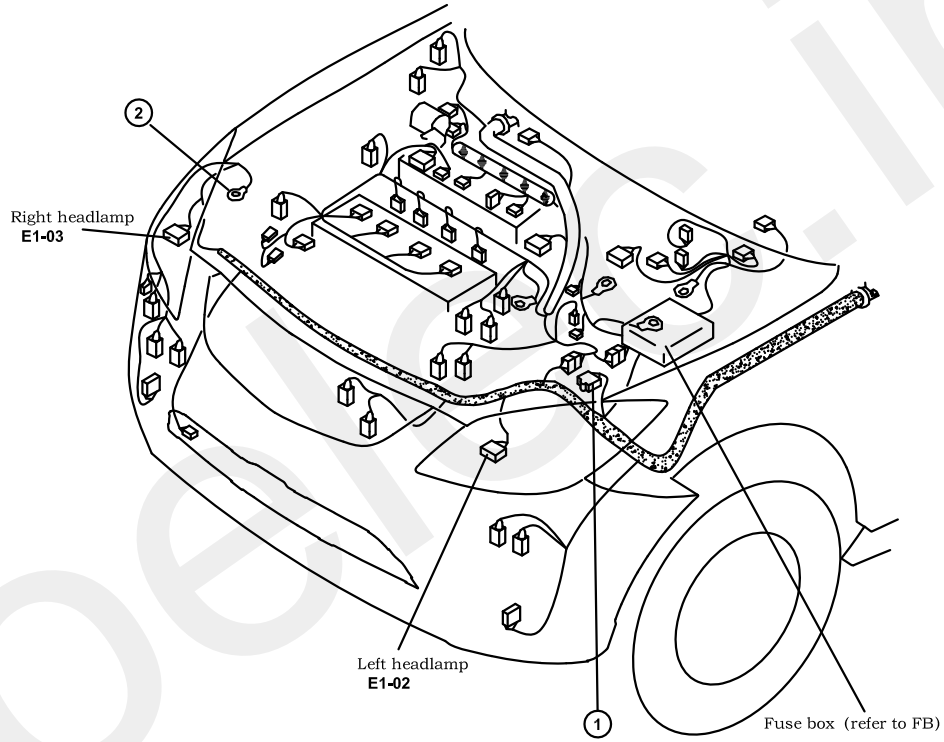

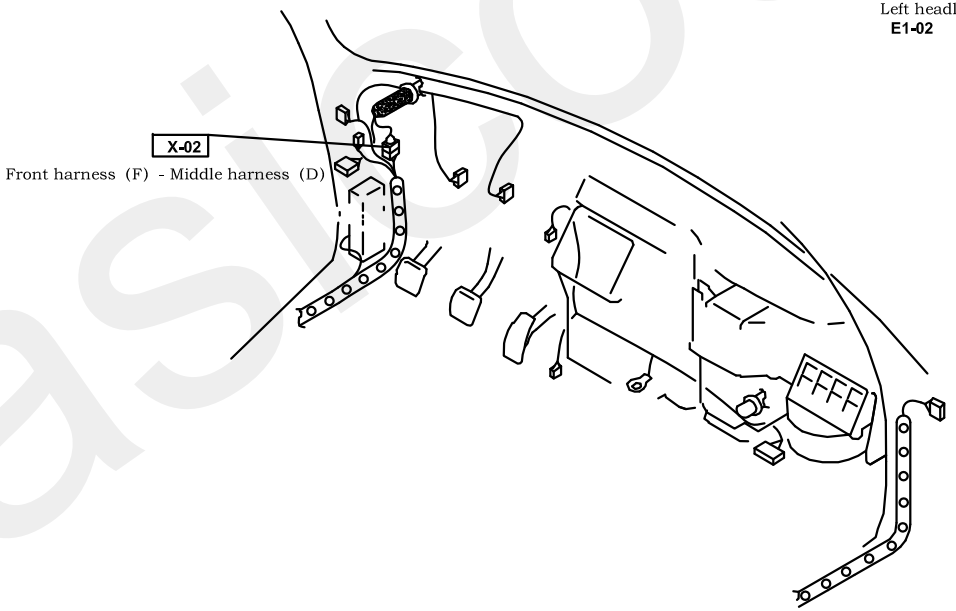

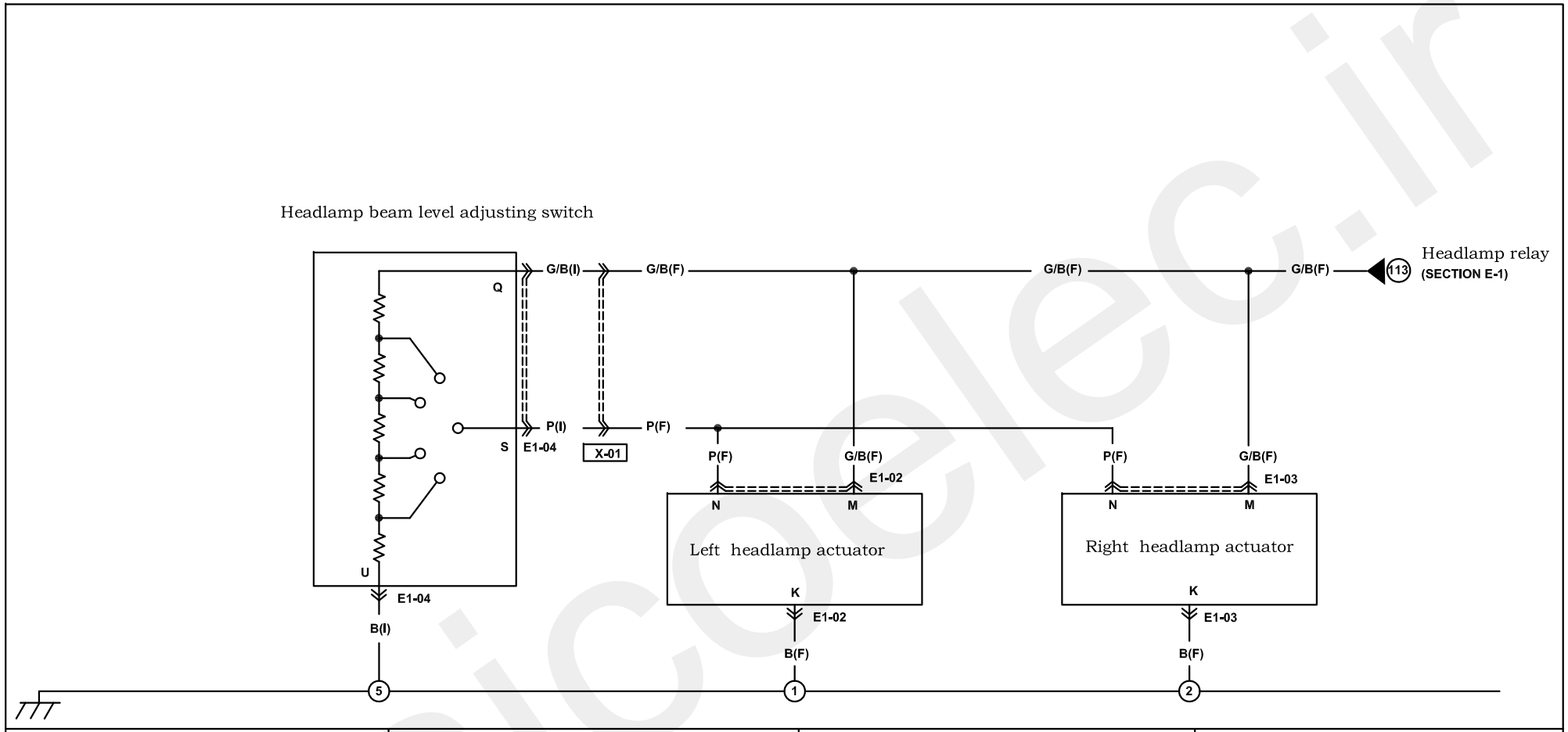

E1-01 Headlamp switch (D)

6	L/W	*	L/O	L/G	L/B	L	1
12	*	*	L/R	LG	L/Y	B	7

E1-02 Left headlamp (F)

M	K	I	E	C	A
G/B, B, P, LG	G/B, G/W, G/R, GR, B, B		* * Y/L *		
N	L	J	F	D	B

E1-03 Right headlamp (F)

M	K	I	E	C	A
G/B, B, P, LG	G/B, G/W, G/R, GR, B, B		* * Y/L *		
N	L	J	F	D	B

L1-01 Headlamp beam level adjusting switch (I)

S	Q	O	M	K	I	G	E	C	A
R/B	LG	LG/B	L/W	L	L/O	L/B	V	R/G	R/Y
B	P	G/B	* &P/L	W	*	*	*	*	B
T	R	P	N	L	J	H	F	D	B

Harness mark: (F) (E) (D) (R)

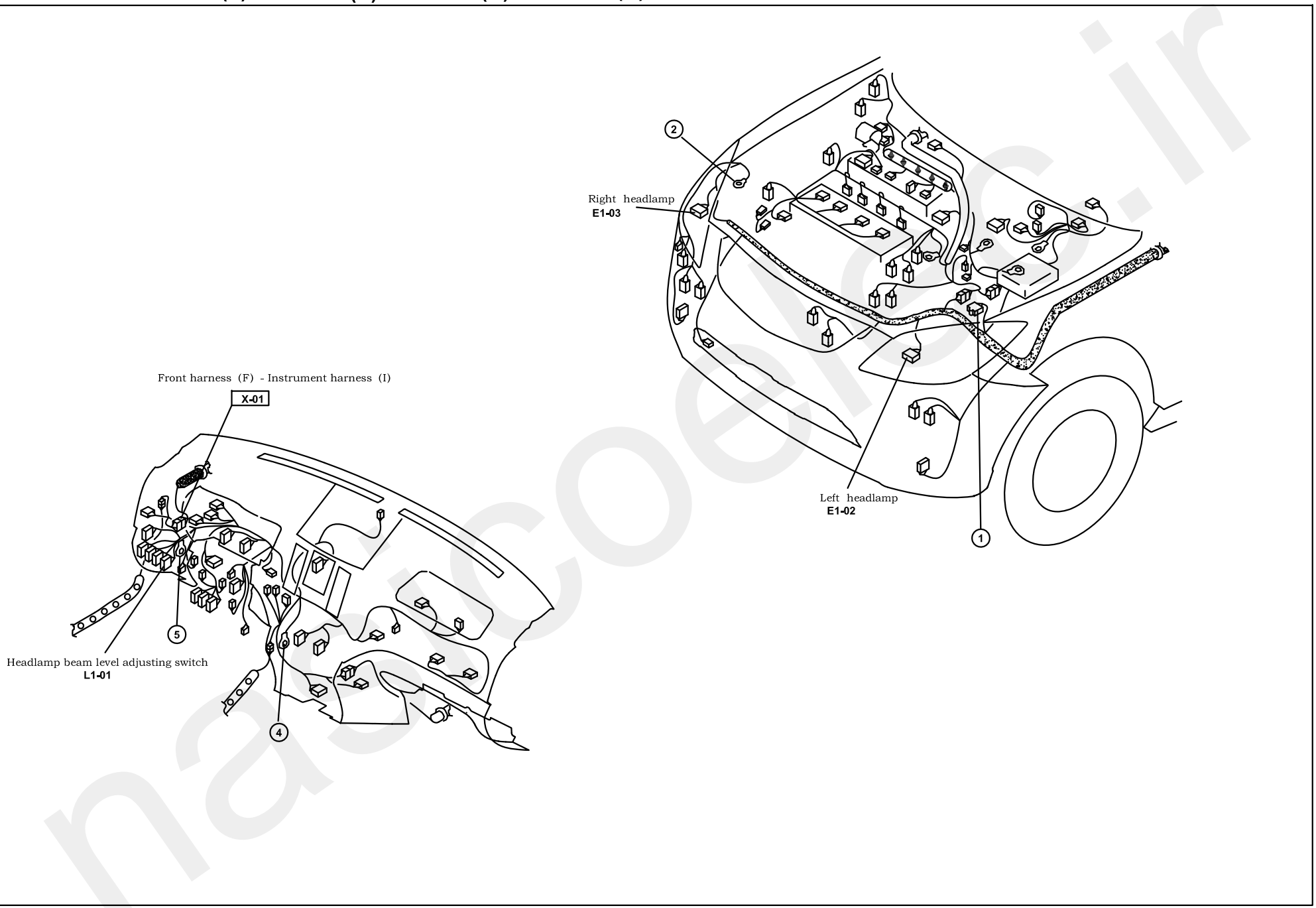

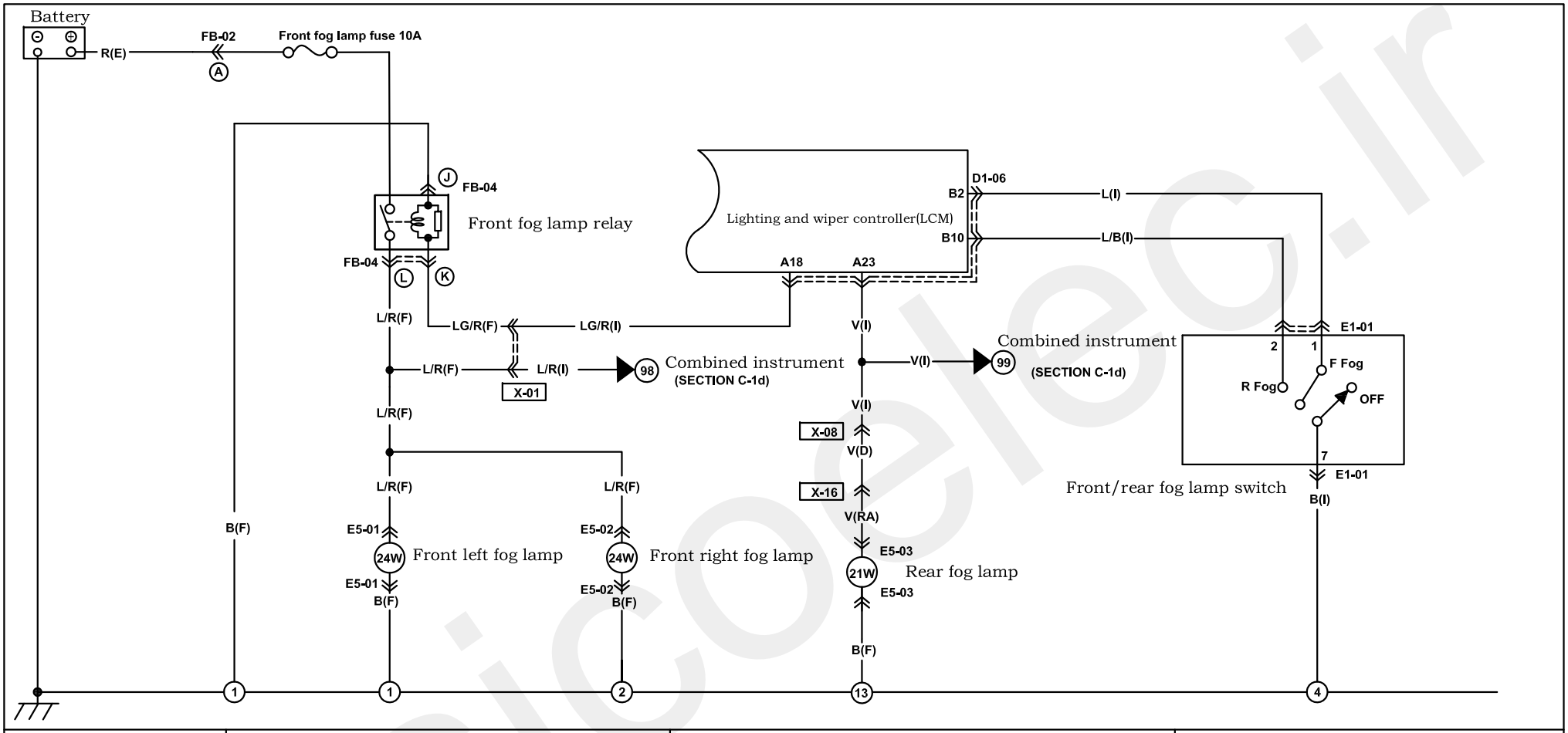

E5-01 Front left fog lamp (F)

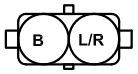

E5-02 Front right fog lamp (F)

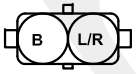

E5-03 Rear left fog lamp (RA)

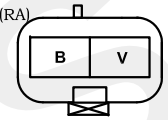

E1-01 Headlamp switch (I)

6	L/W	*	L/O	L/G	L/B	L	1
12	*	*	L/R	LG	L/Y	B	7

D1-06 Lighting and wiper controller (I)

A13	B/O	L/Y	B	B	L/O	Y/G	L/G	P/L	*	BR	*	G/O	G/L	A1
A26	B/W	B/Y	R/L	V	L	GR	*	L/R	LG/R	L/B	G/B	G/W	B	A14

D1-06 Lighting and wiper controller (I)

B1	G	L	L/Y	L/R	W/R	V/R	P	LG/R	B8
B9	Y	L/B	LG	L/W	W/Y	V/B	V/G	W/L	B16

Harness mark: (F) (E) (D) (R)

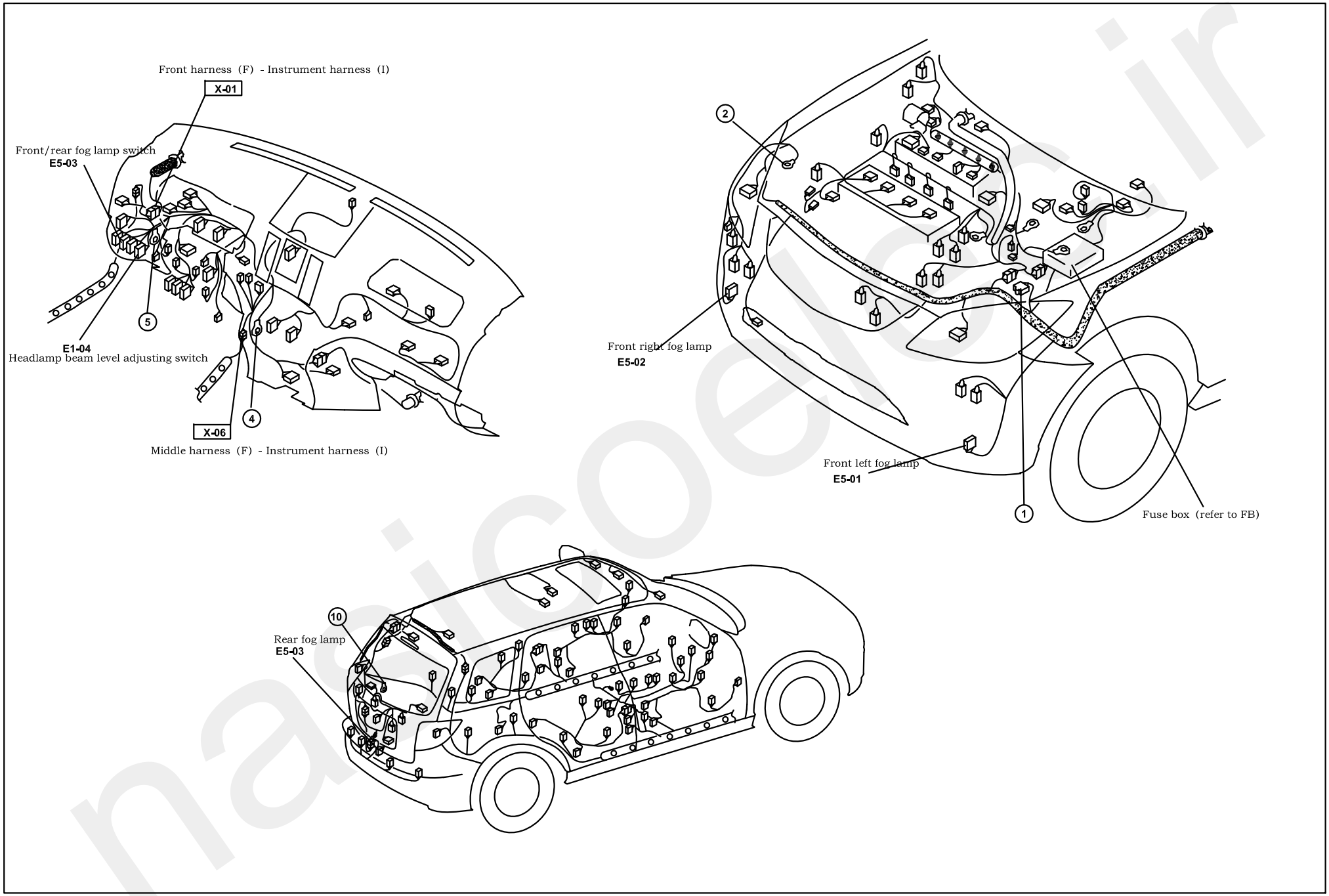

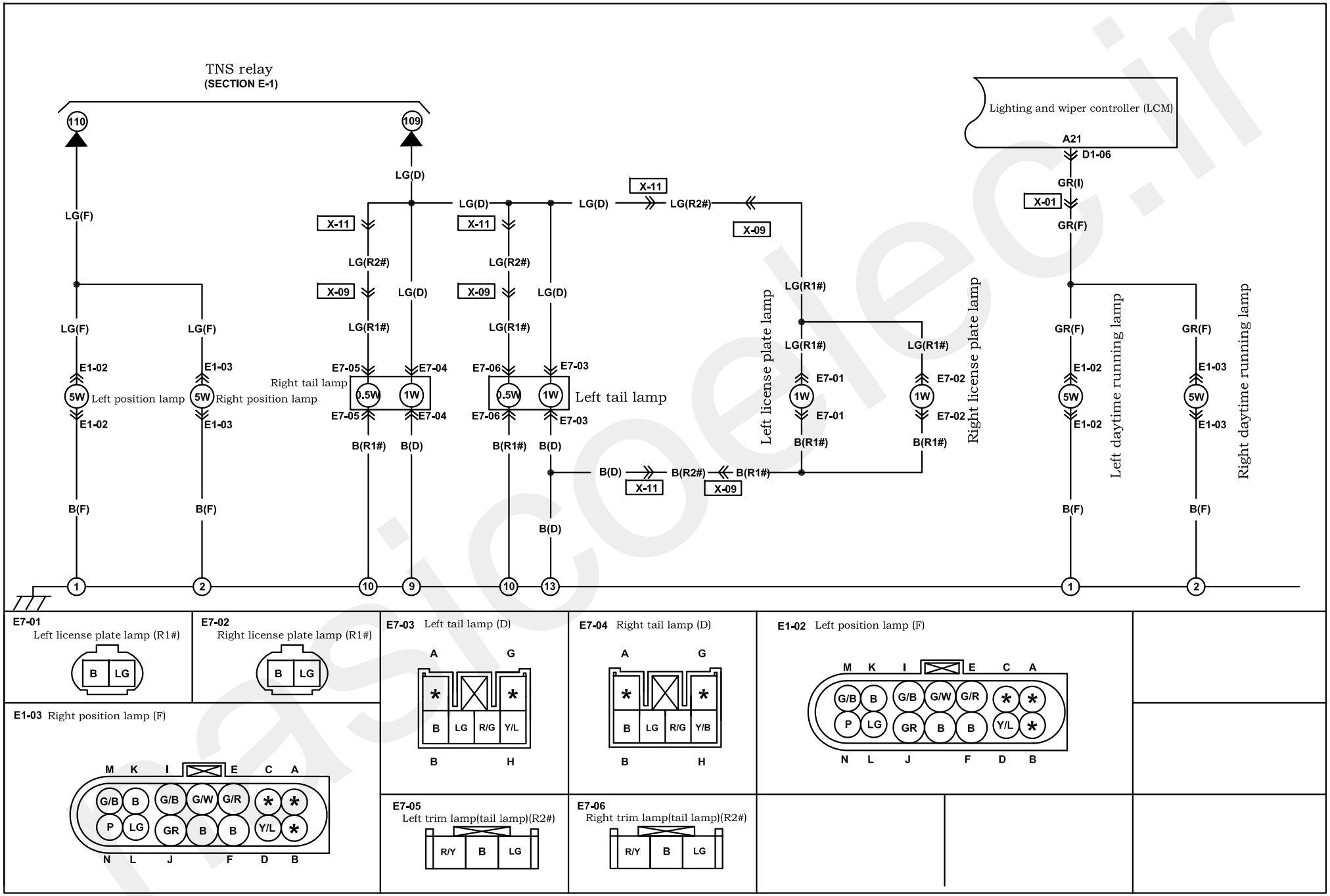

E7-01 Left license plate lamp (R1#)

E7-02 Right license plate lamp (R1#)

E7-03 Left tail lamp (D)

E7-04 Right tail lamp (D)

E1-02 Left position lamp (F)

E1-03 Right position lamp (F)

E7-05 Left trim lamp(tail lamp)(R2#)

E7-06 Right trim lamp(tail lamp)(R2#)

Harness mark: (F) (E) (D) (R)

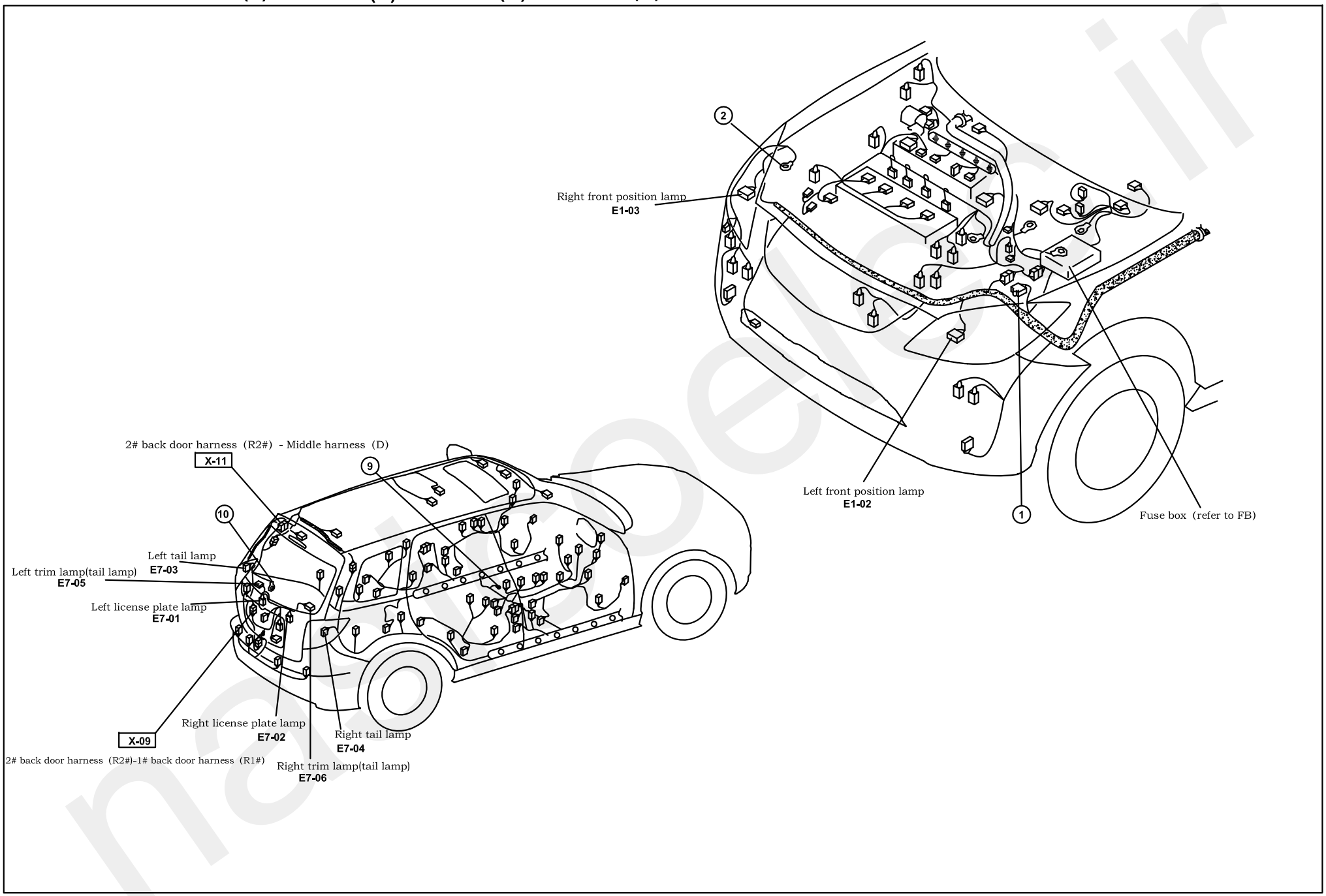

Turn indicator and hazard warning lamp

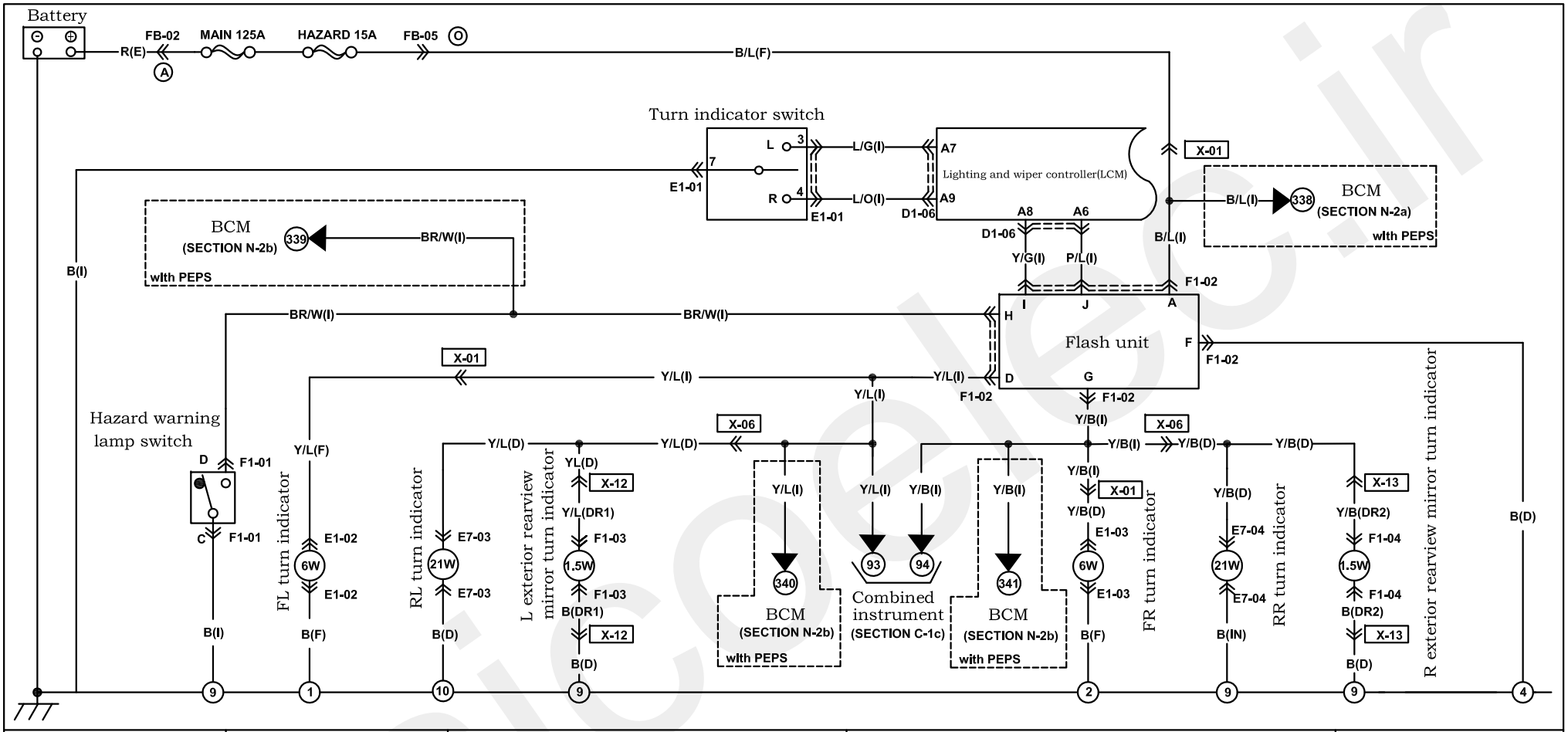

E7-04 RR turn indicator (D)

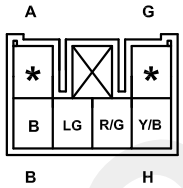

F1-02 Flash unit (D)

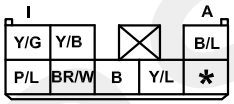

F1-03 L exterior rearview mirror turn indicator (DR1)

F1-04 R exterior rearview mirror turn indicator (DR2)

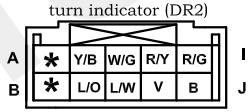

E1-02 FL turn indicator (F)

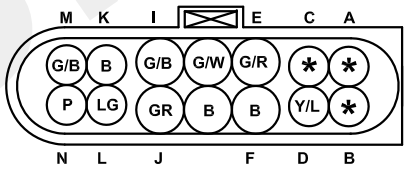

E1-01 Turn indicator switch (I)

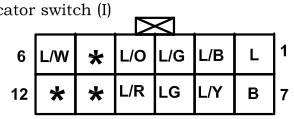

E1-03 FR turn indicator (F)

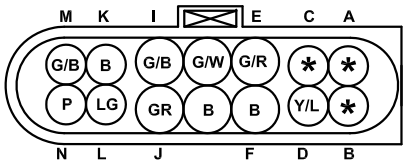

D1-06 Lighting and wiper controller (I)

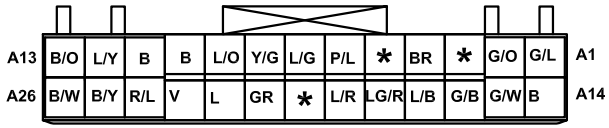

E7-03 RL turn indicator (D)

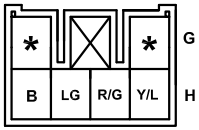

F1-01 Hazard warning lamp switch (I)

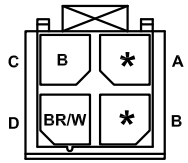

Harness mark: (F) (E) (D) (R)

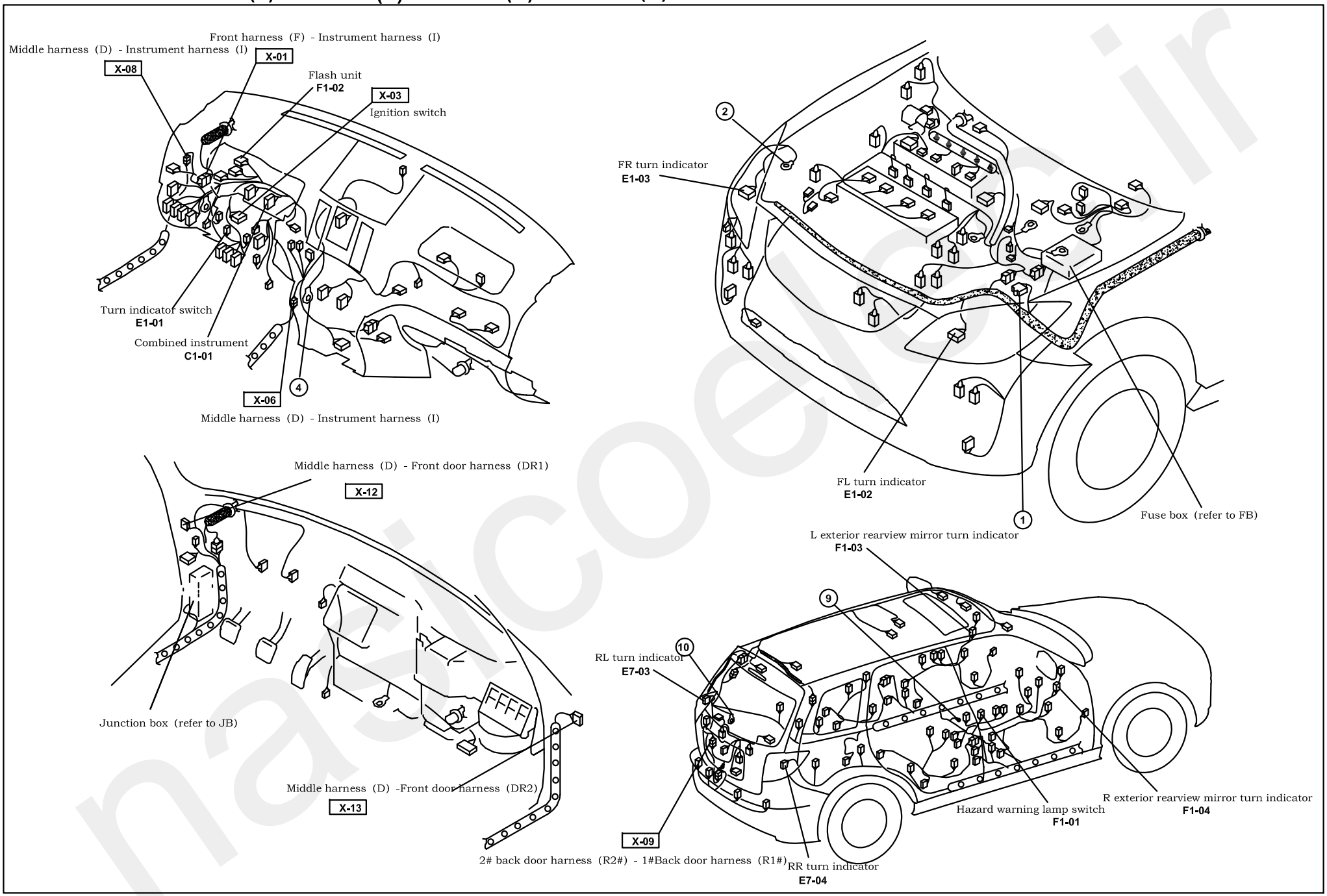

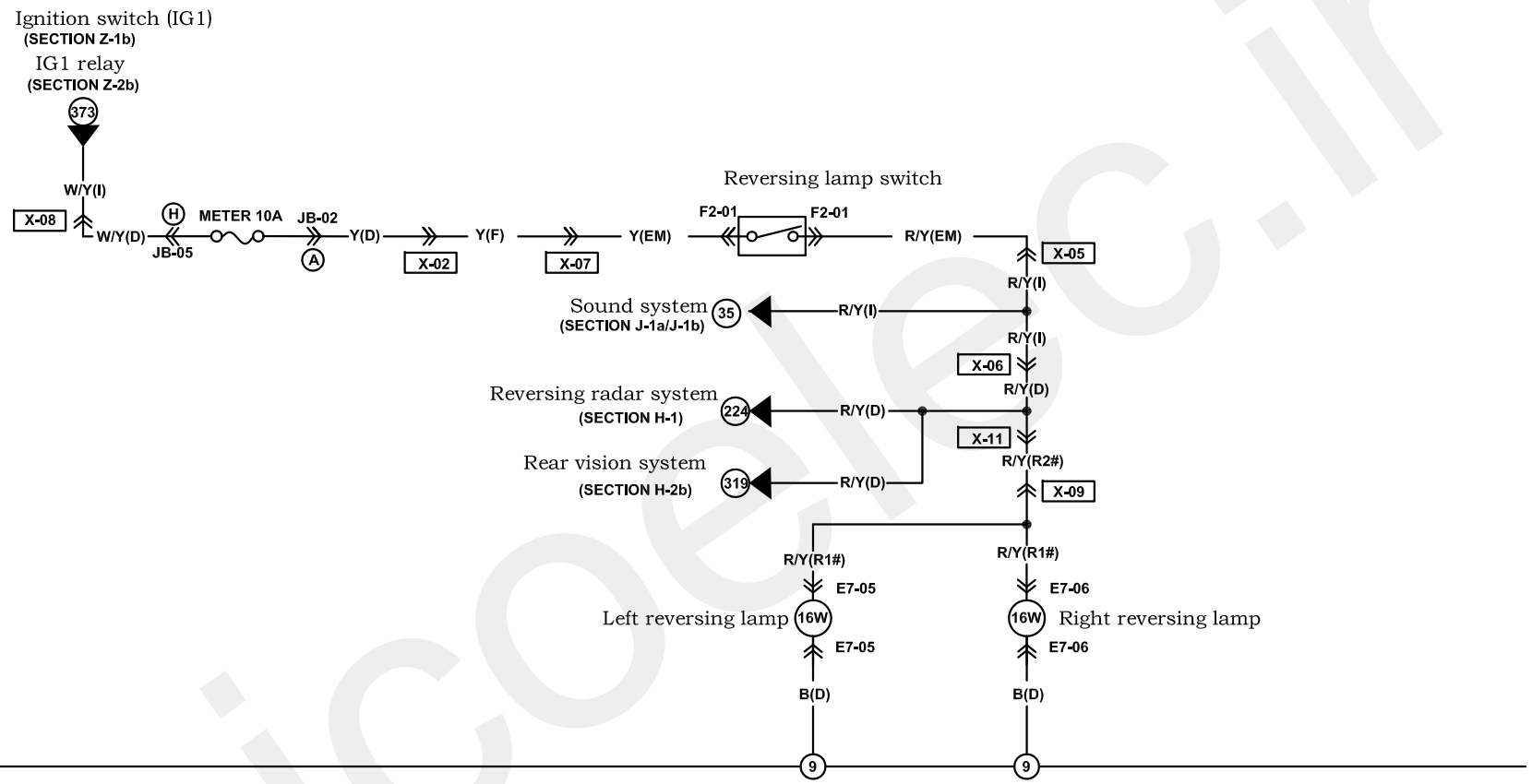

F2-01 Reversing lamp switch (EM)

E7-05

Left trim lamp(tail lamp)(R2#)

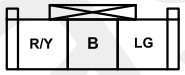

E7-06

Right trim lamp(tail lamp)(R2#)

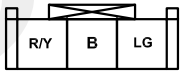

Harness mark: (F) (E) (D) (R)

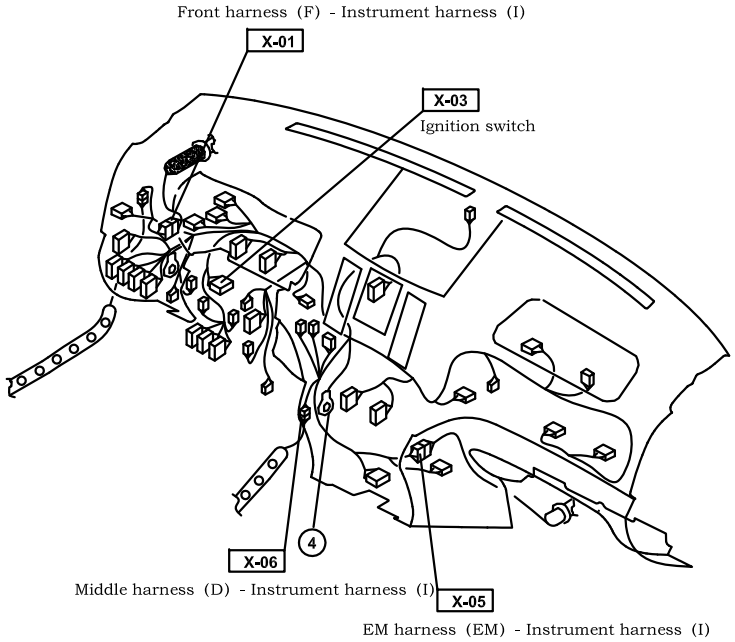

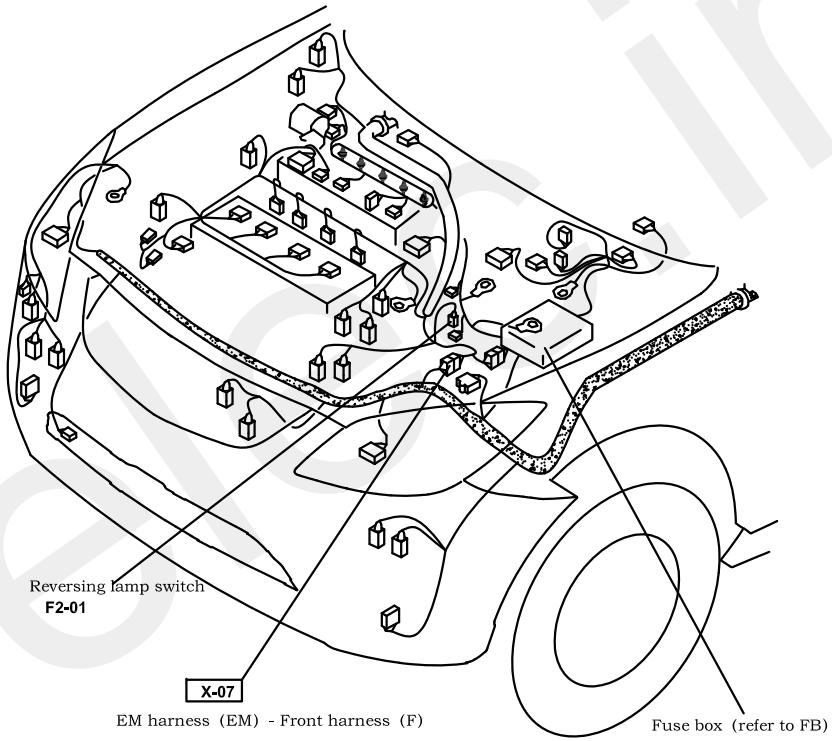

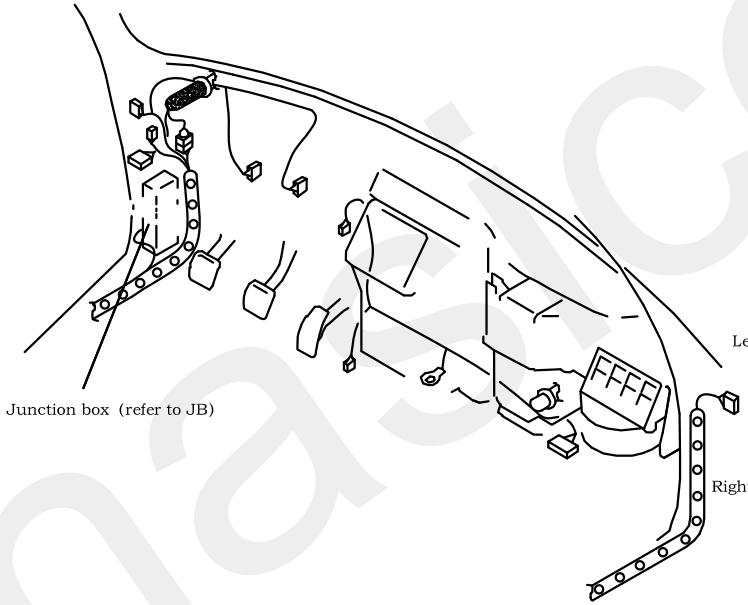

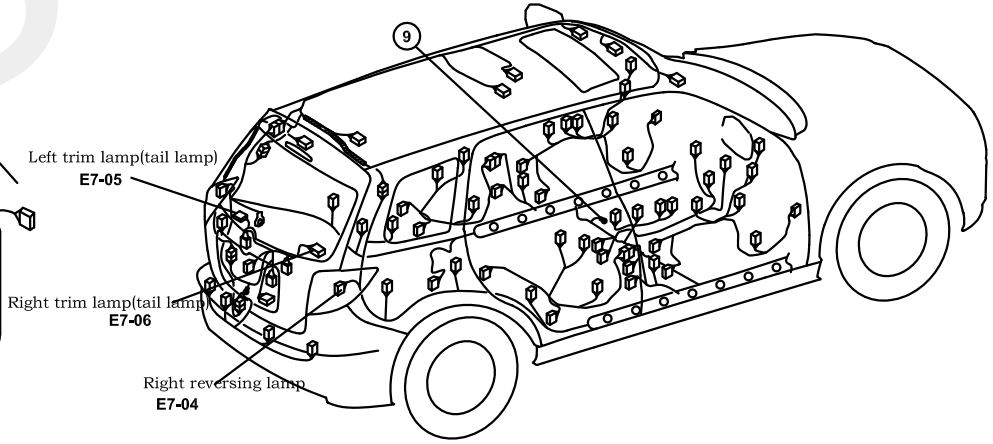

Brake lamp

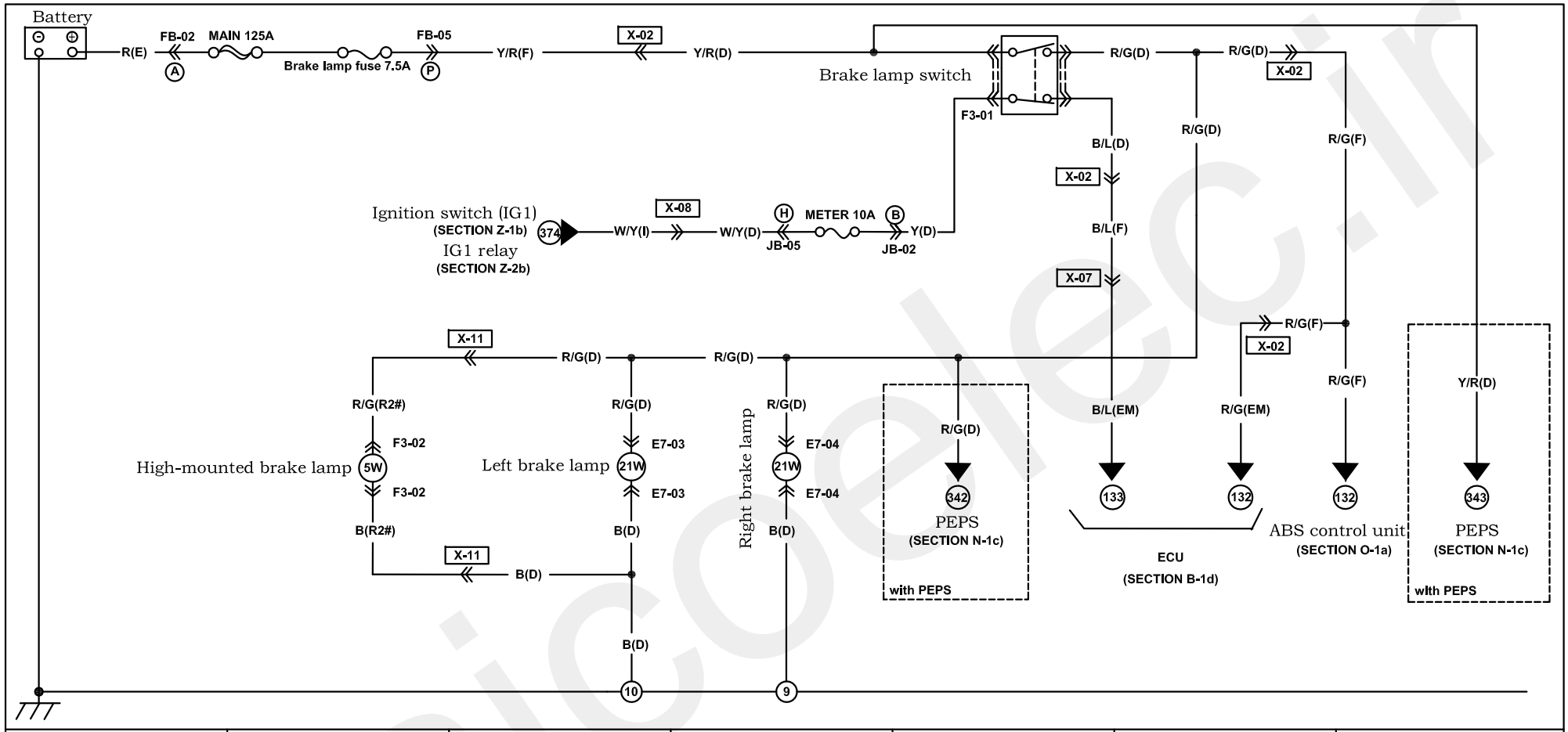

F3-01 Brake switch (D)

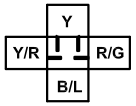

F3-02 High-mounted brake lamp(R2#)

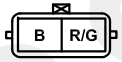

E7-03 Left brake lamp(D)

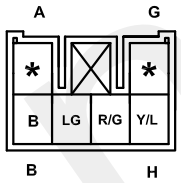

E7-04 Right brake lamp(D)

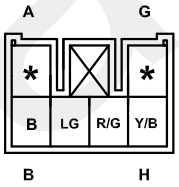

Harness mark: (F) (E) (D) (R)

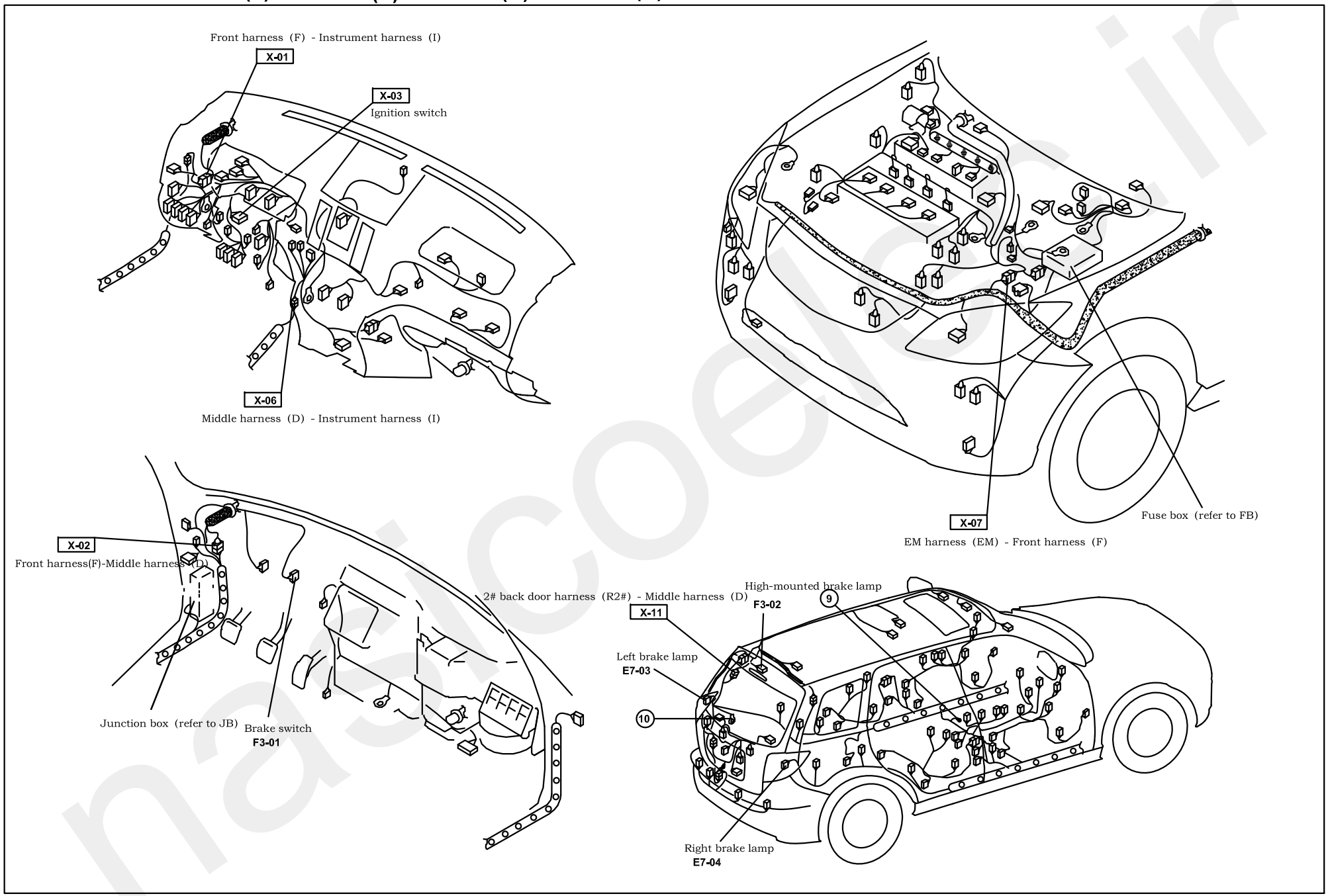

Battery

R(E)

FB-02 (A)

MAIN 125A

HORN 15A

Horn relay

FB-04 (A)

FB-05 (A)

L/O(F)

X-02

L/O(D)

X-08

L/O(I)

L/O(I) — 344 — BCM (SECTION N-2b)

L/O(I) — 215 — Remote door lock control unit (SECTION K-2d)

L/R(F)

L/R(F)

L/R(F)

F4-01

Low pitch horn

F4-03

F4-02

High pitch horn

F4-04

F4-05

Clock spring

Horn switch

1

2

F4-01 Low pitch horn (F) L/R	**F4-02** High pitch horn(F) L/R	**F4-05** Clock spring (I) [ ] With cruise * * L/O [Y/L] * * [G/O] [LG/E] * * LG R/G * * R/W *			
F4-03 Low pitch horn (F) B	**F4-04** High pitch horn(F) B				

Harness mark: (F) (E) (D) (R)

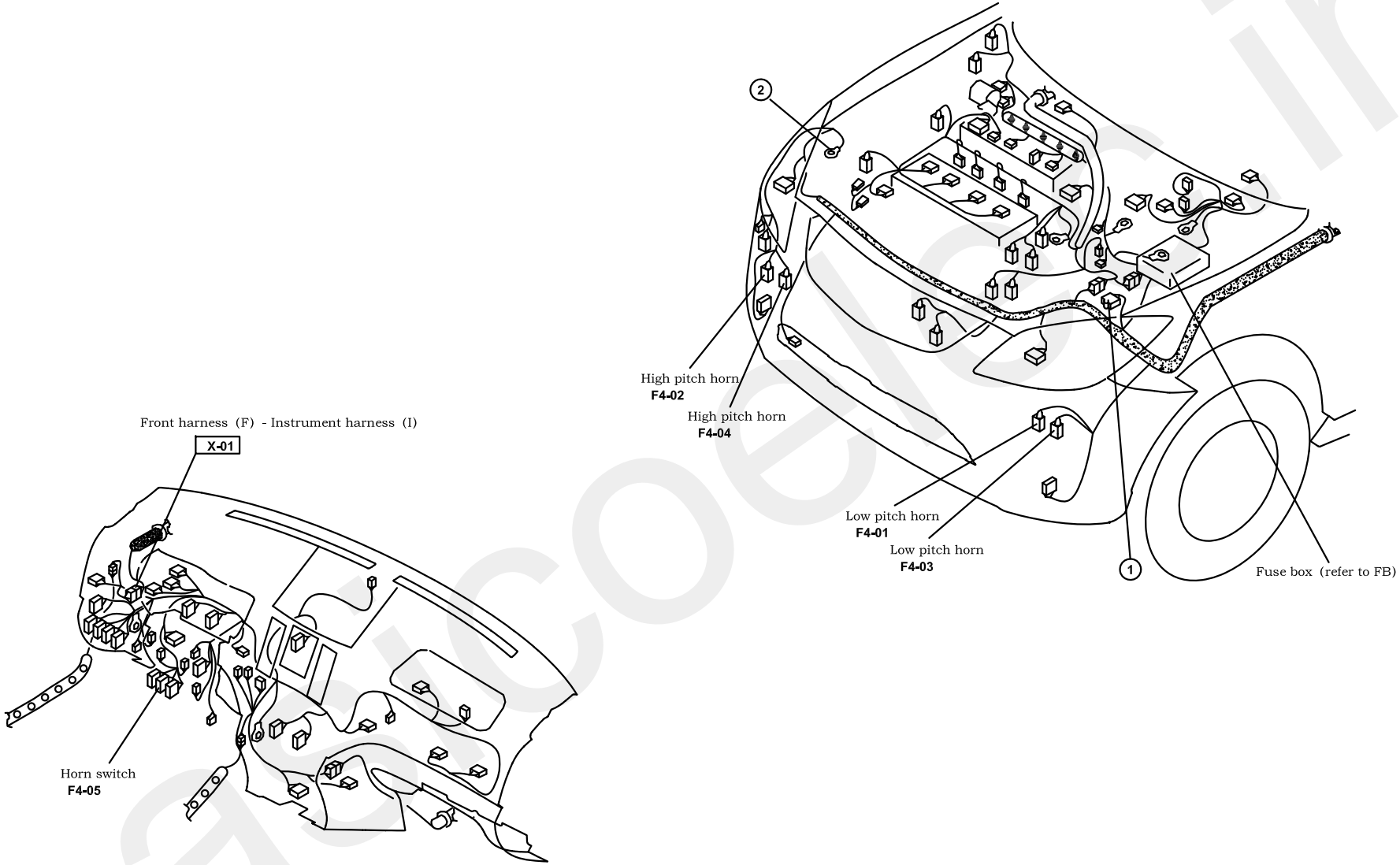

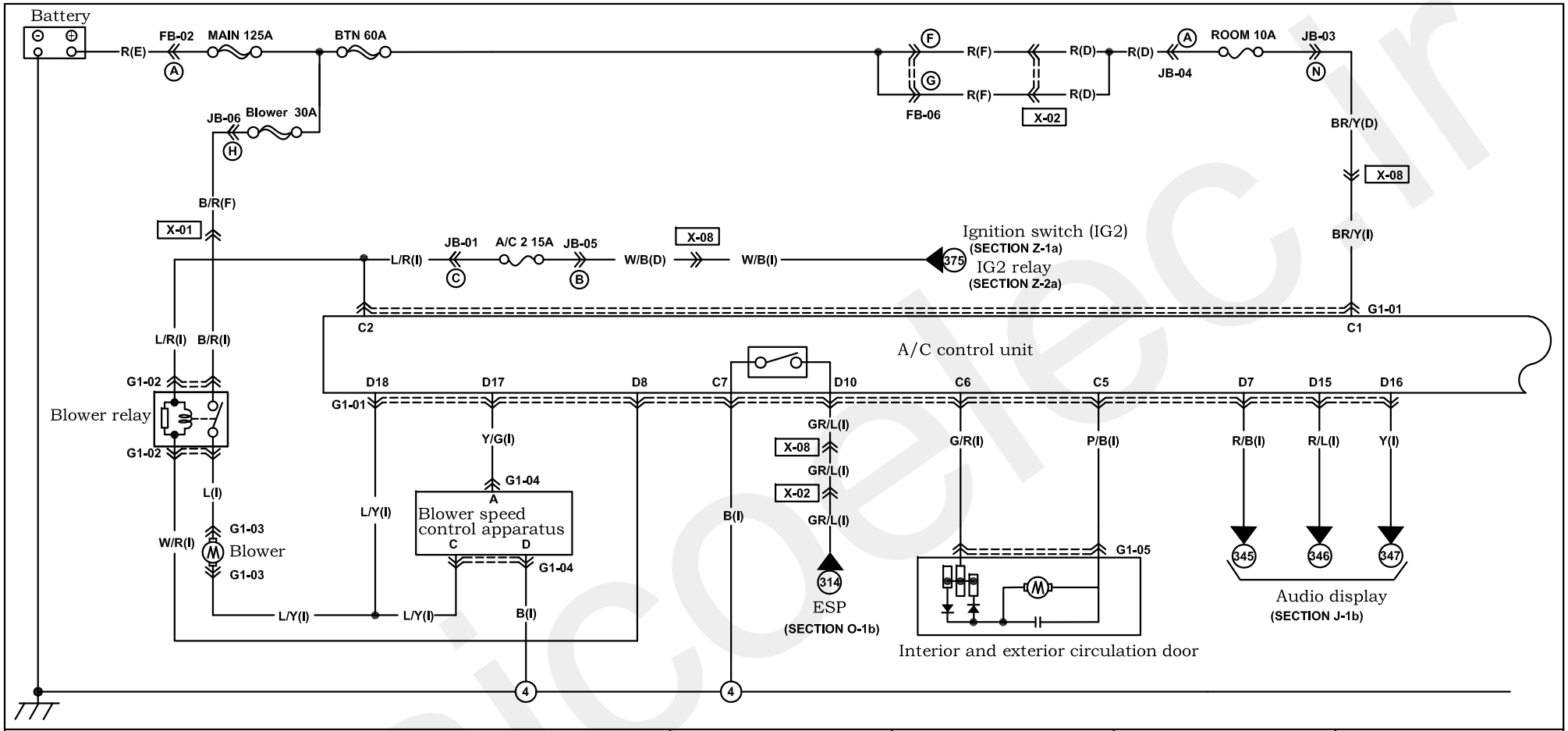

G1-01 A/C control unit (I)

( ) with **ESP**

C1 C6

BR/Y	L/R	Y/R	Y/L	P/B	G/R
B	W	W/B	W/G	G	B/W

C7 C12

D1 D10

LG	L/R	L/W	R/G	L	O	R/B	W/R	*	GR/L
LG/B	V	Y/B	W/L	R/L	Y	Y/G	L/Y	*	*

D11 D20

G1-02 Blower relay (I)

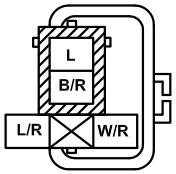

G1-03 Blower (I)

G1-04 Blower speed control apparatus(I)

L/Y	Y/G
B	*

G1-05 Interior and exterior circulation door (I)

P/B	*	*	*	*	G/R

Harness mark: (F) (E) (D) (R)

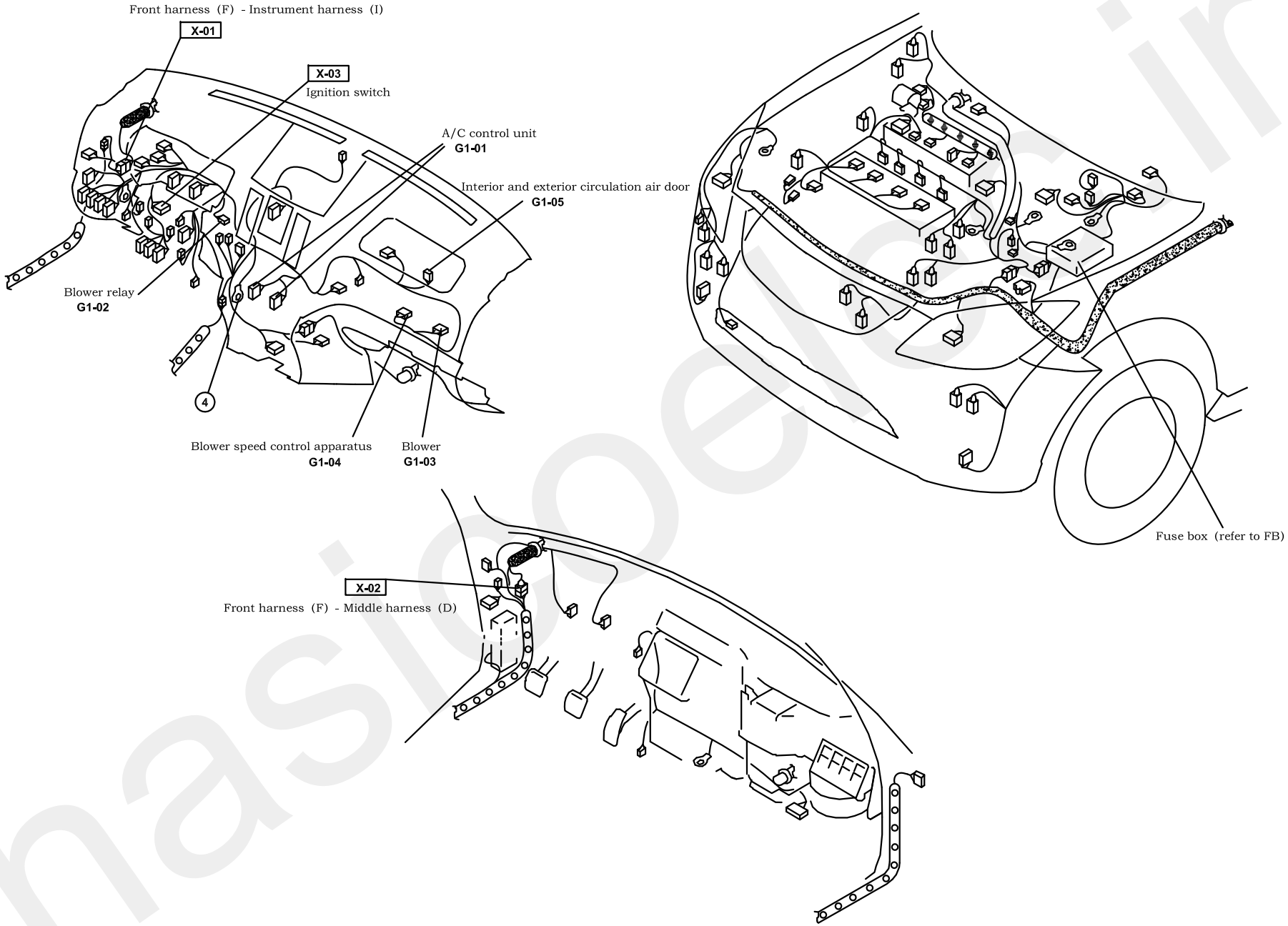

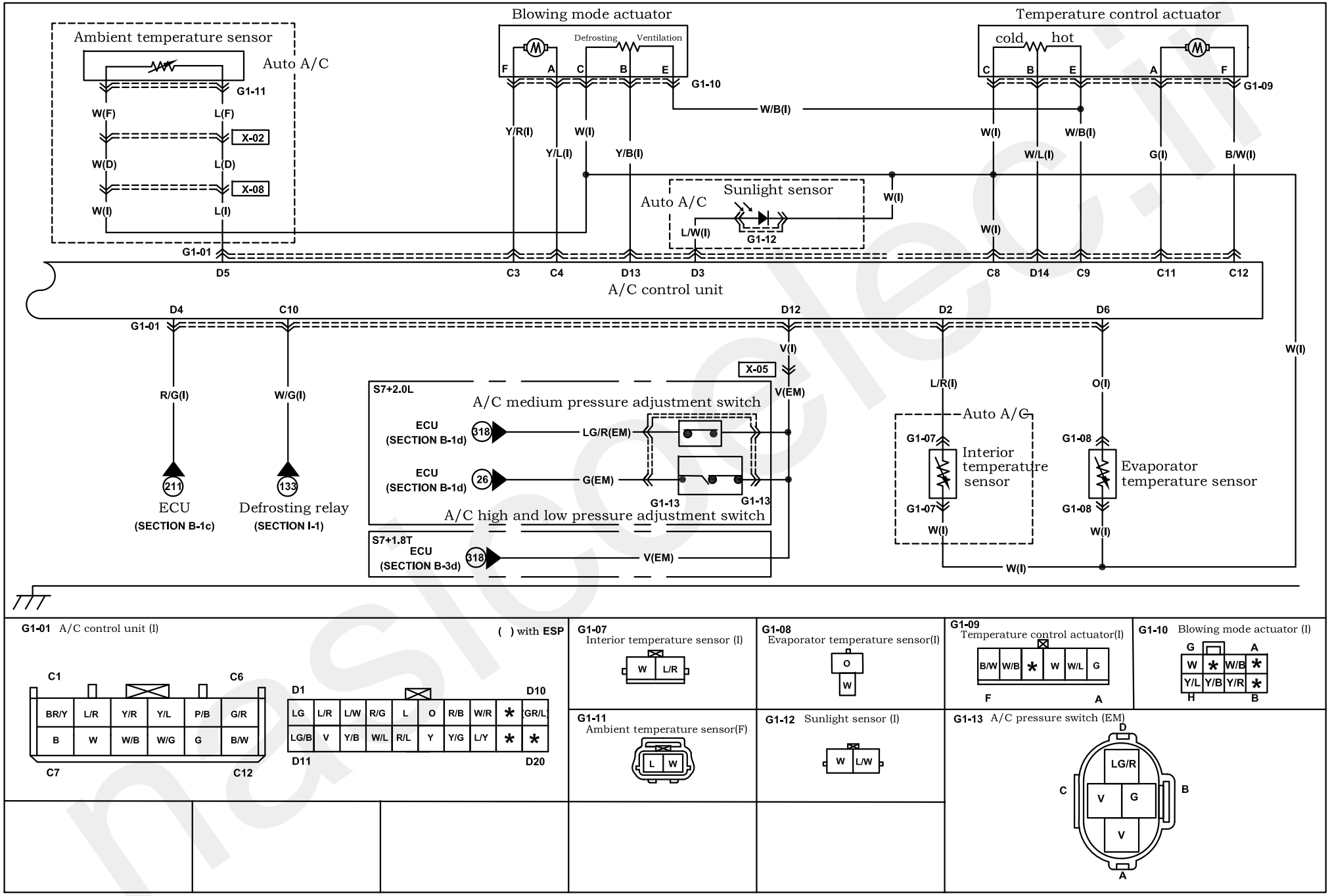

G1-01 A/C control unit (I)

( ) with ESP

C1 … C6

BR/Y	L/R	Y/R	Y/L	P/B	G/R
B	W	W/B	W/G	G	B/W

C7 … C12

D1 … D10

LG	L/R	L/W	R/G	L	O	R/B	W/R	*	(GR/L)
LG/B	V	Y/B	W/L	R/L	Y	Y/G	L/Y	*	*

D11 … D20

G1-07 Interior temperature sensor (I)

W	L/R

G1-08 Evaporator temperature sensor(I)

O
W

G1-09 Temperature control actuator(I)

B/W	W/B	*	W	W/L	G

F … A

G1-10 Blowing mode actuator (I)

G … A

W	*	W/B	*
Y/L	Y/B	Y/R	*

H … B

G1-11 Ambient temperature sensor(F)

L	W

G1-12 Sunlight sensor (I)

W	L/W

G1-13 A/C pressure switch (EM)

D

	LG/R	
C	V	G
	V	

B

A

Harness mark: (F) (E) (D) (R)

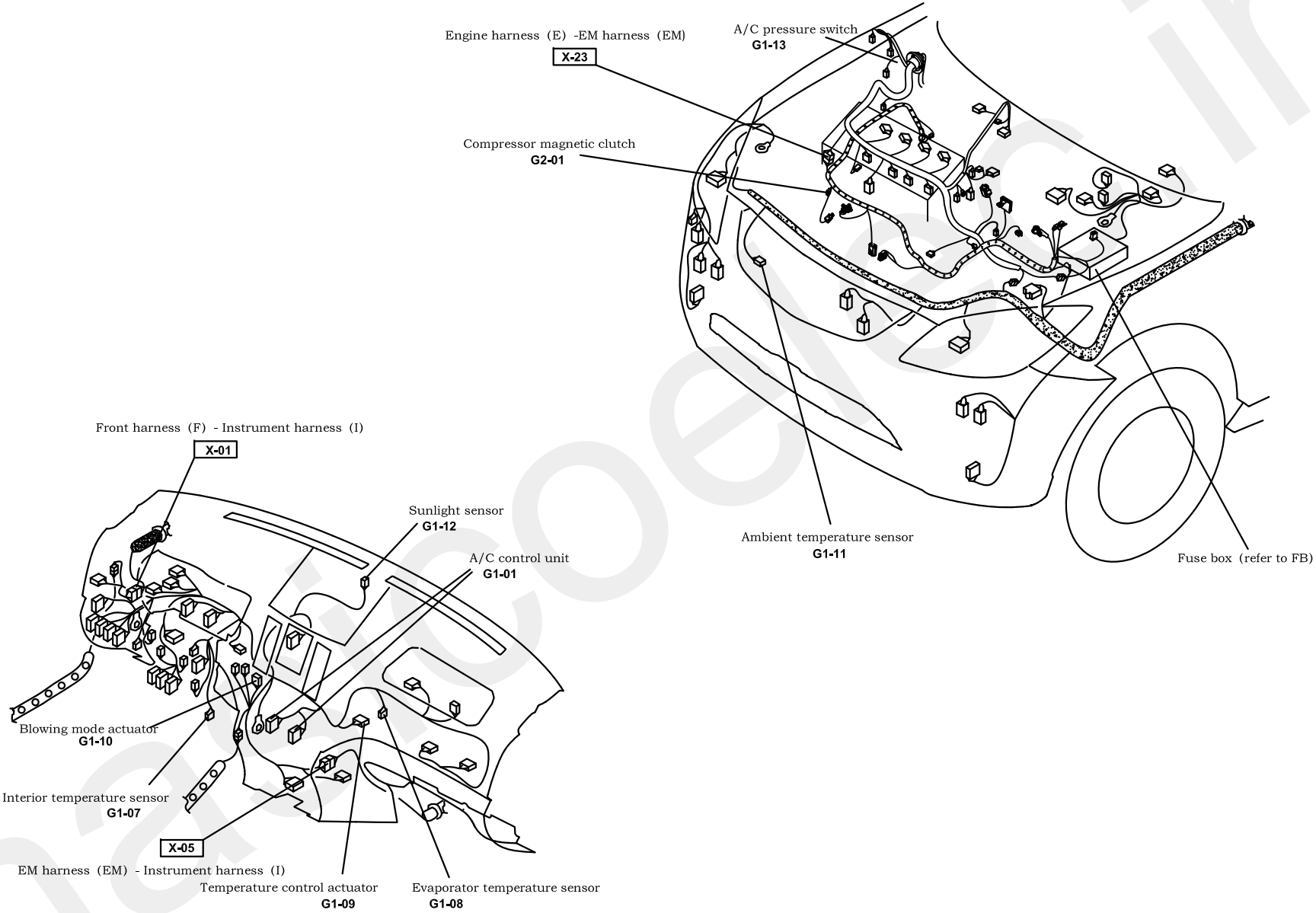

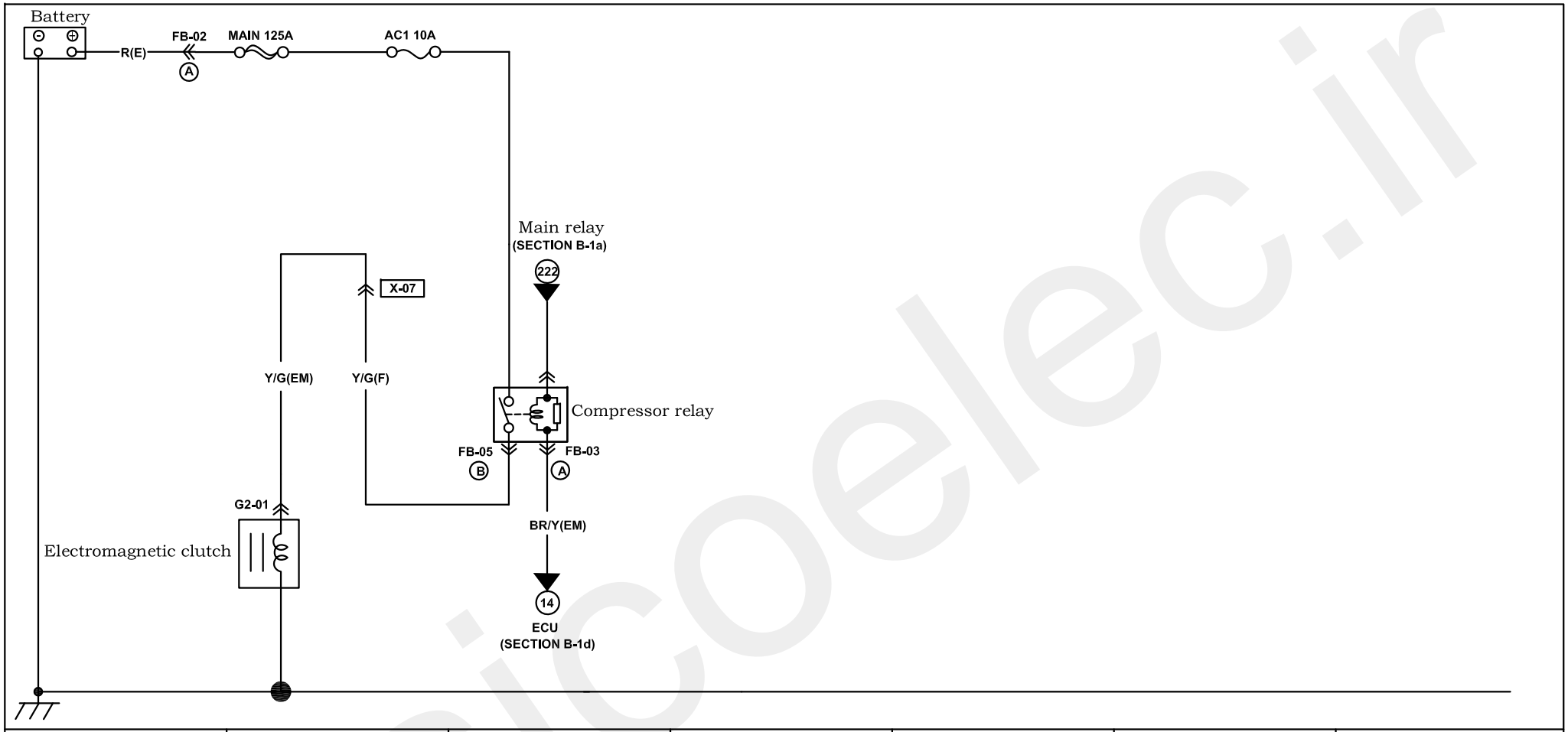

G2-01 Electromagnetic clutch (EM) 						

Harness mark: (F) (E) (D) (R)

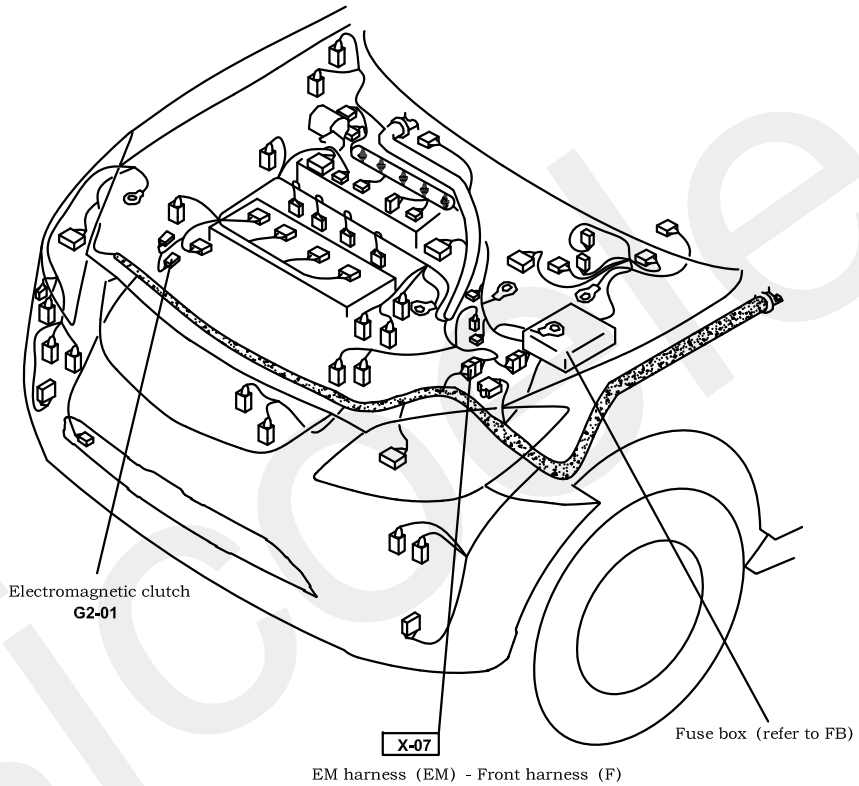

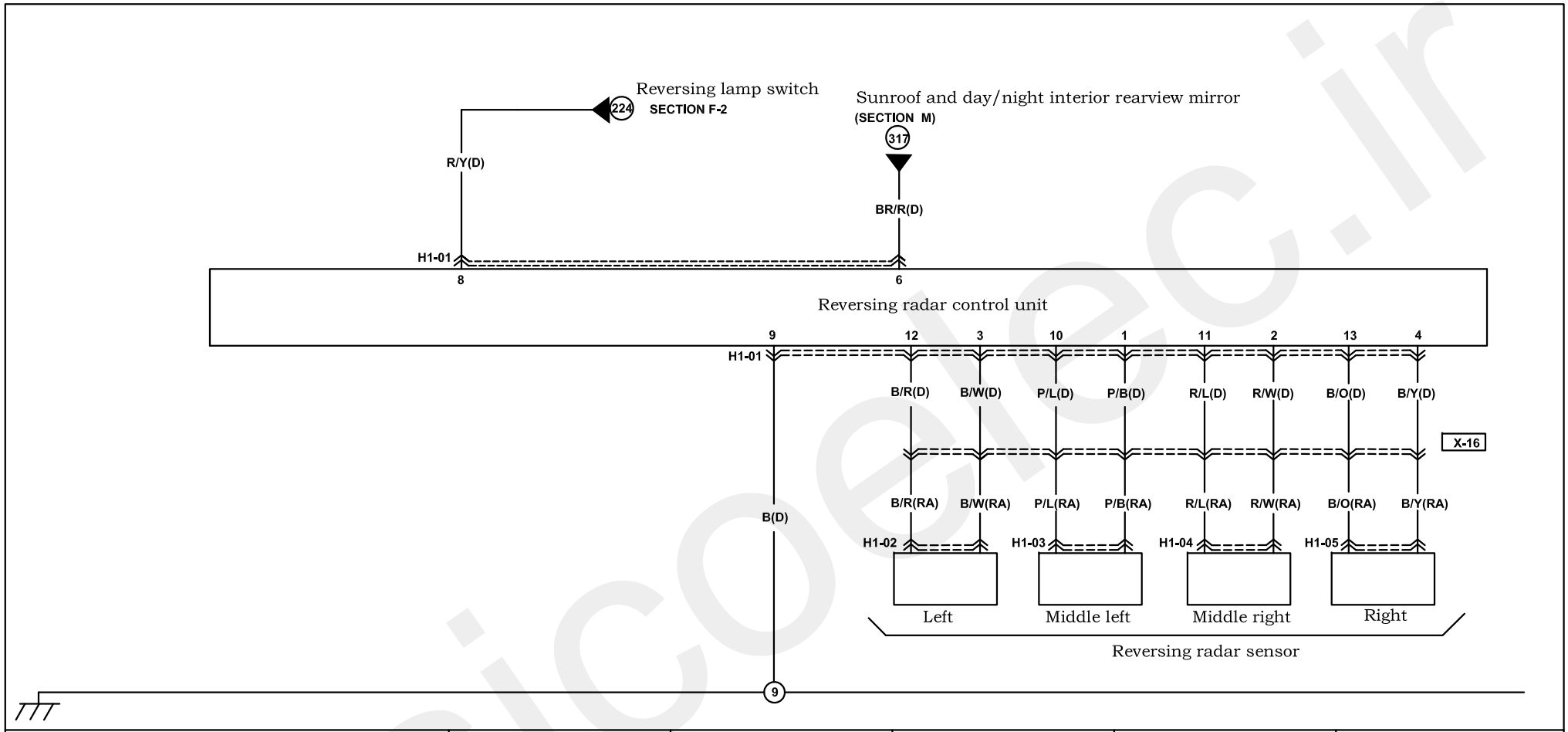

H1-01 Reversing radar control unit (IN)

1							8
P/B	R/W	B/W	B/Y	*	BR/R	*	R/Y
B	P/L	R/L	B/R	B/O	*	*	*
9							16

H1-02 Left reversing radar sensor (RA)

B/R	B/W

H1-03 Middle left reversing radar sensor (RA)

P/L	P/B

H1-04 Middle right reversing radar sensor(RA)

R/L	R/W

H1-05 Right reversing radar sensor(RA)

B/O	B/Y

Harness mark: (F) (E) (D) (R)

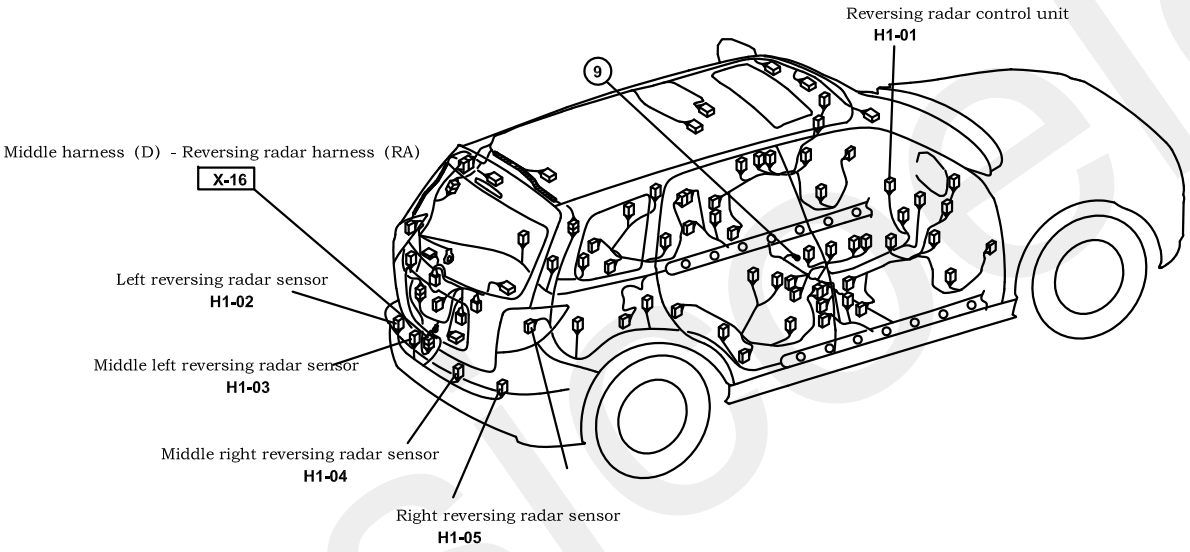

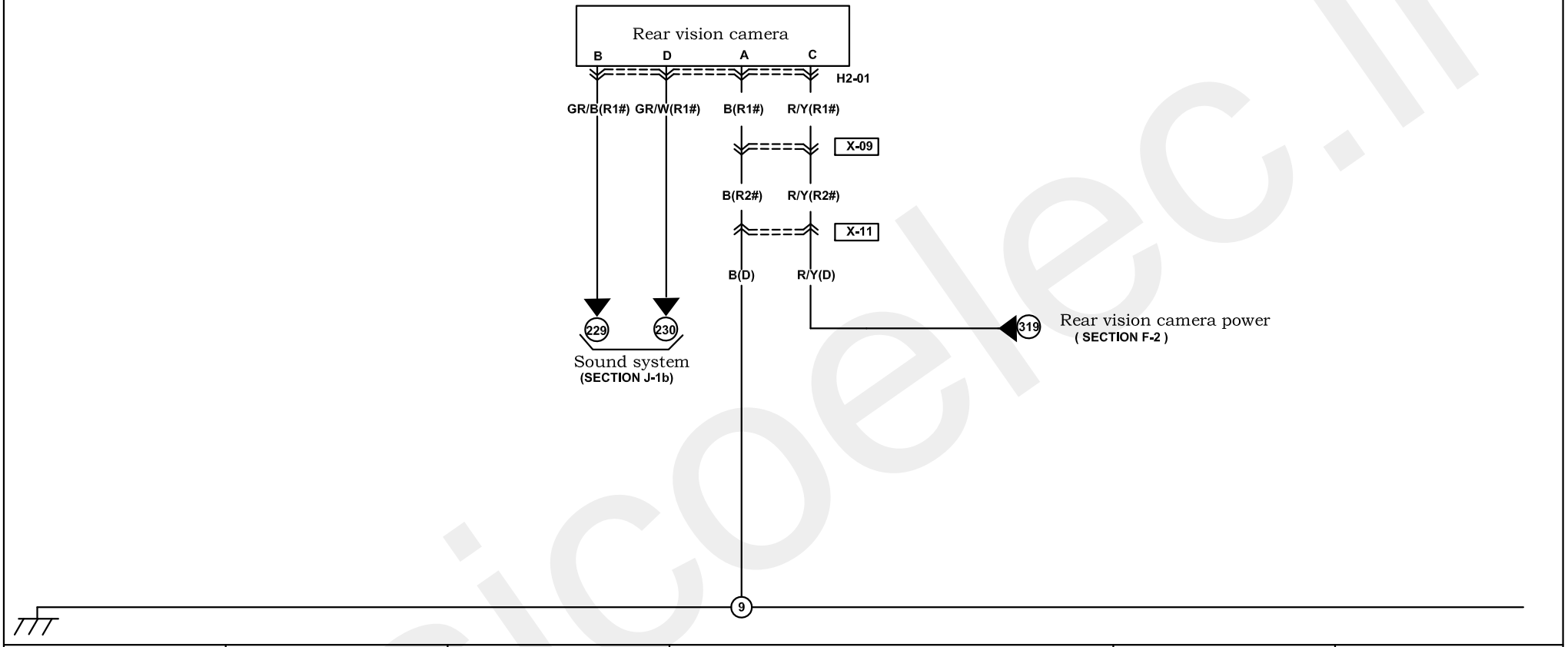

H2-01 Rear vision camera (R1#)

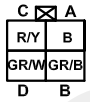

Harness mark: (F) (E) (D) (R)

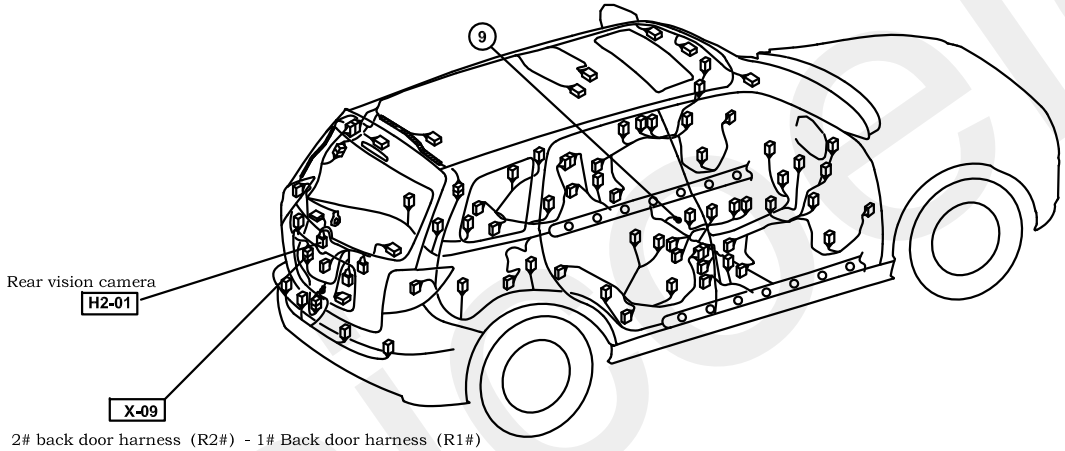

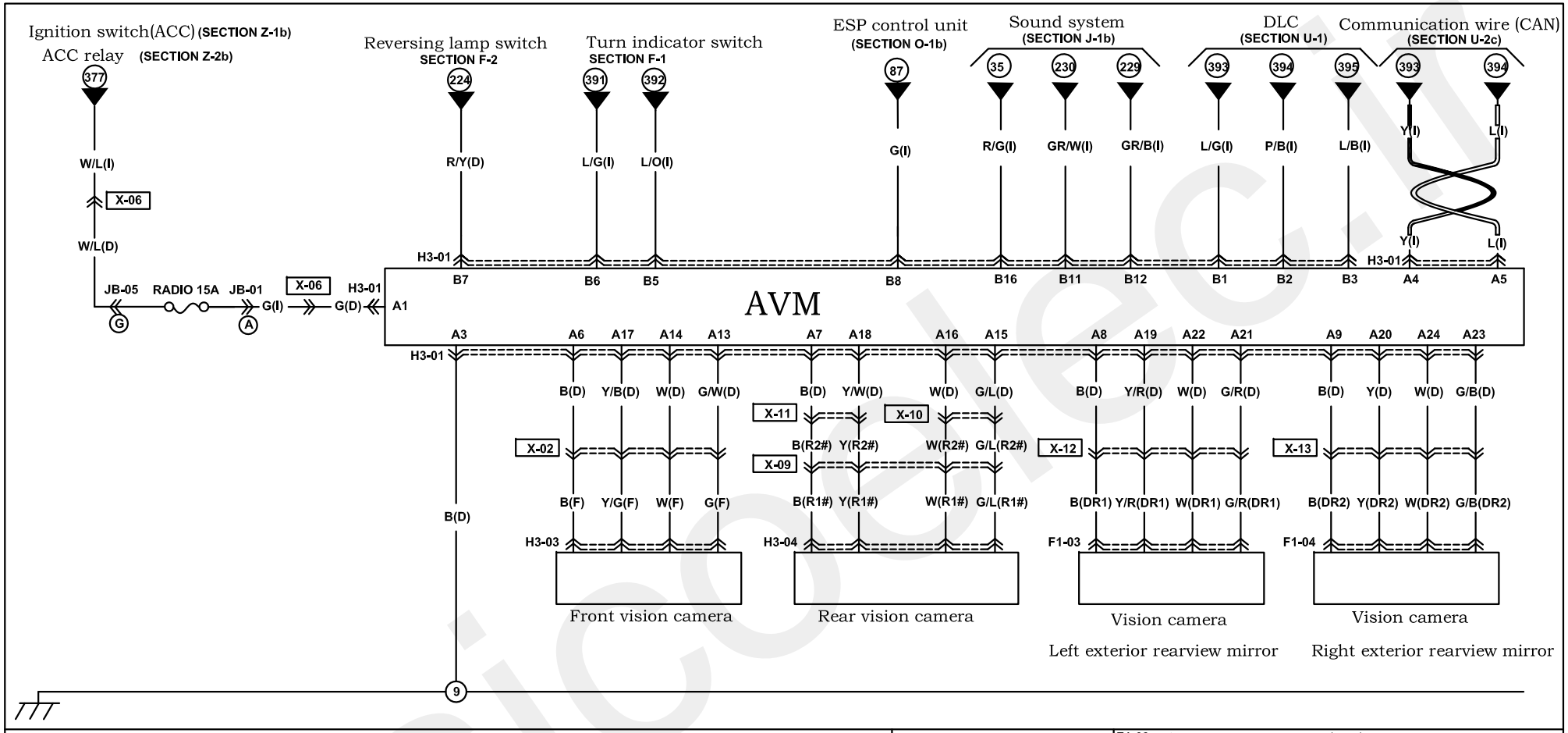

H3-01 AVM control unit

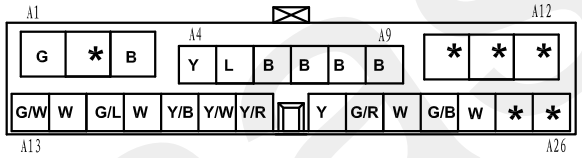

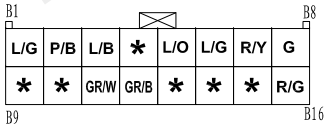

H3-02 Front vision camera (F)

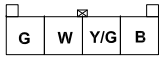

H3-03 Rear vision camera (R1#)

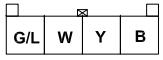

F1-03 Left exterior rearview mirror (DR1)

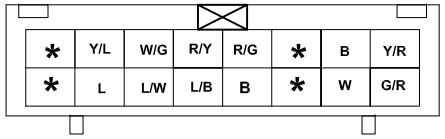

F1-04 Right exterior rearview mirror (DR2)

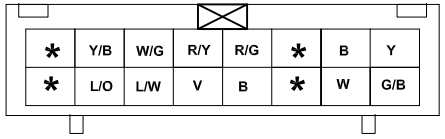

Harness mark: (F) (E) (D) (R)

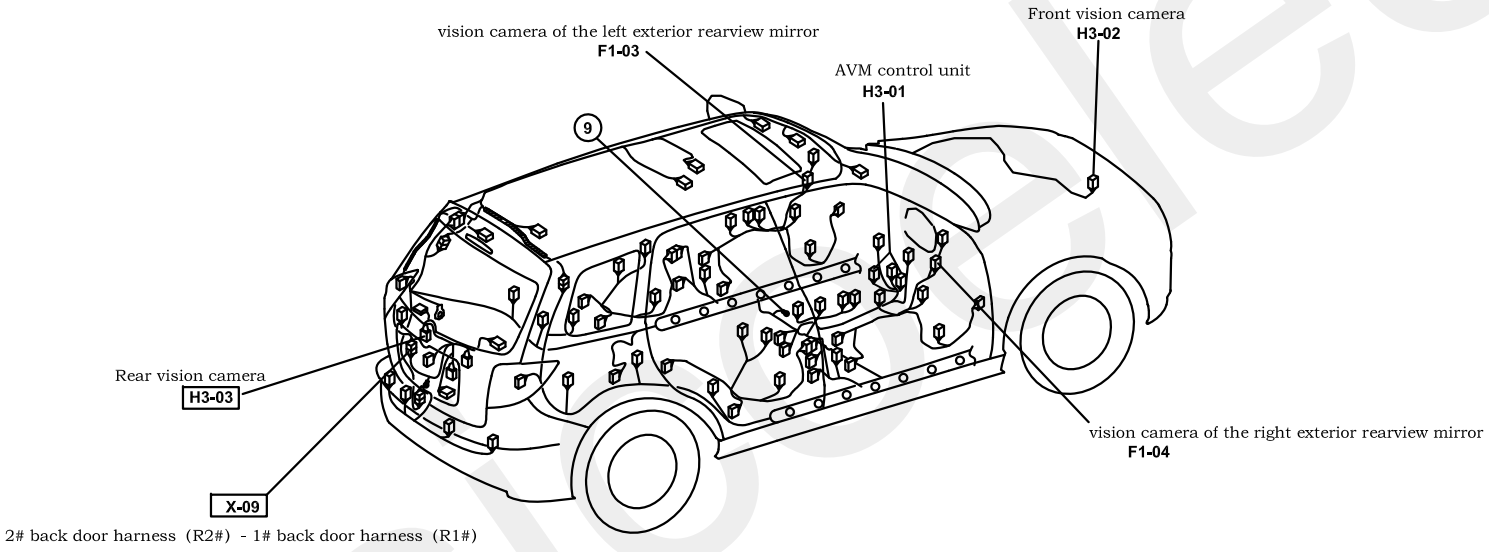

Cigarette lighter/Rear defroster system

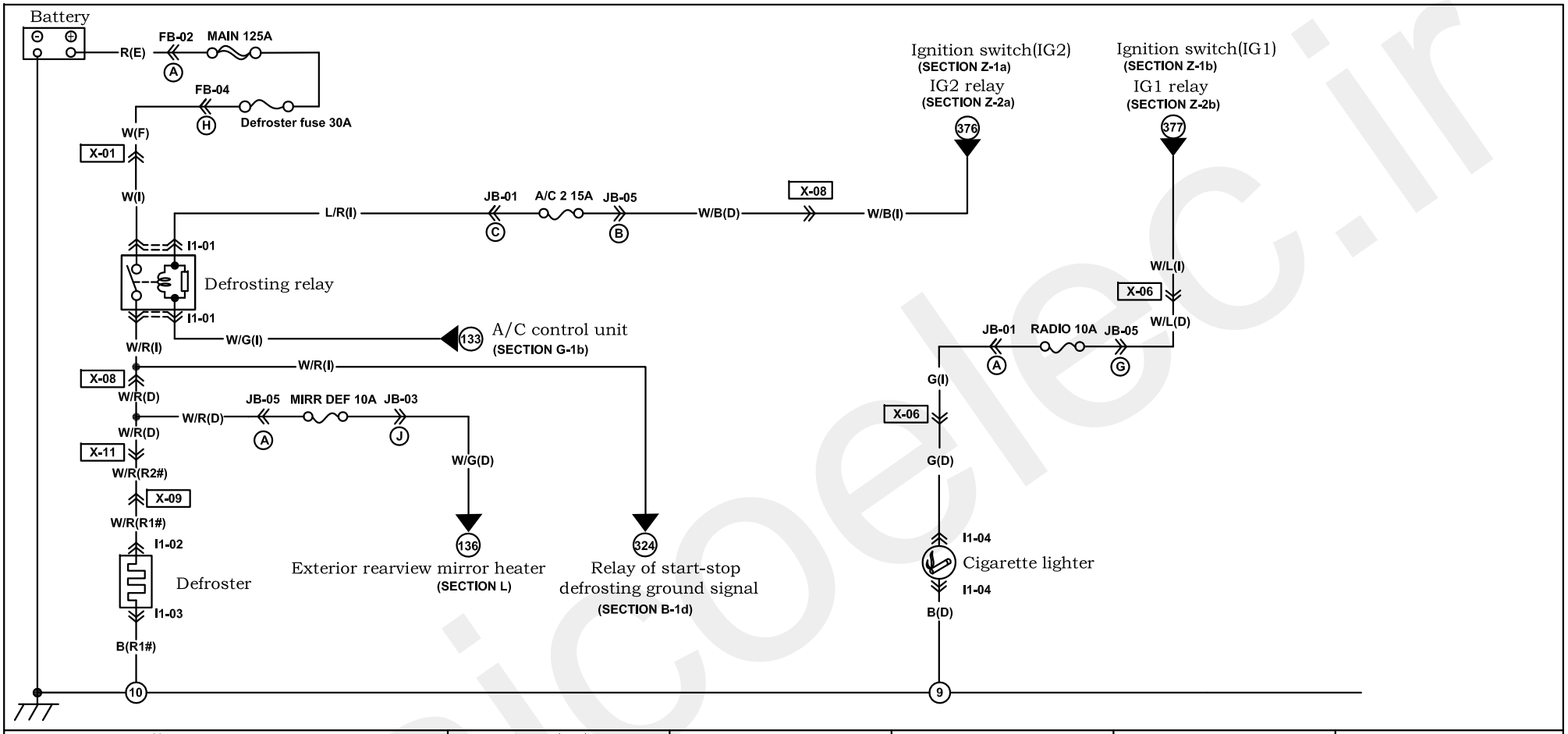

I1-01 Defrosting relay (I)	I1-02 Defroster (R1#)	I1-03 Defroster (R1#)	I1-04 Cigarette lighter (I)		
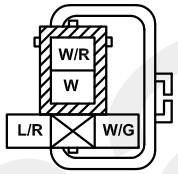			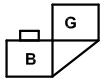		

Harness mark: (F) (E) (D) (R)

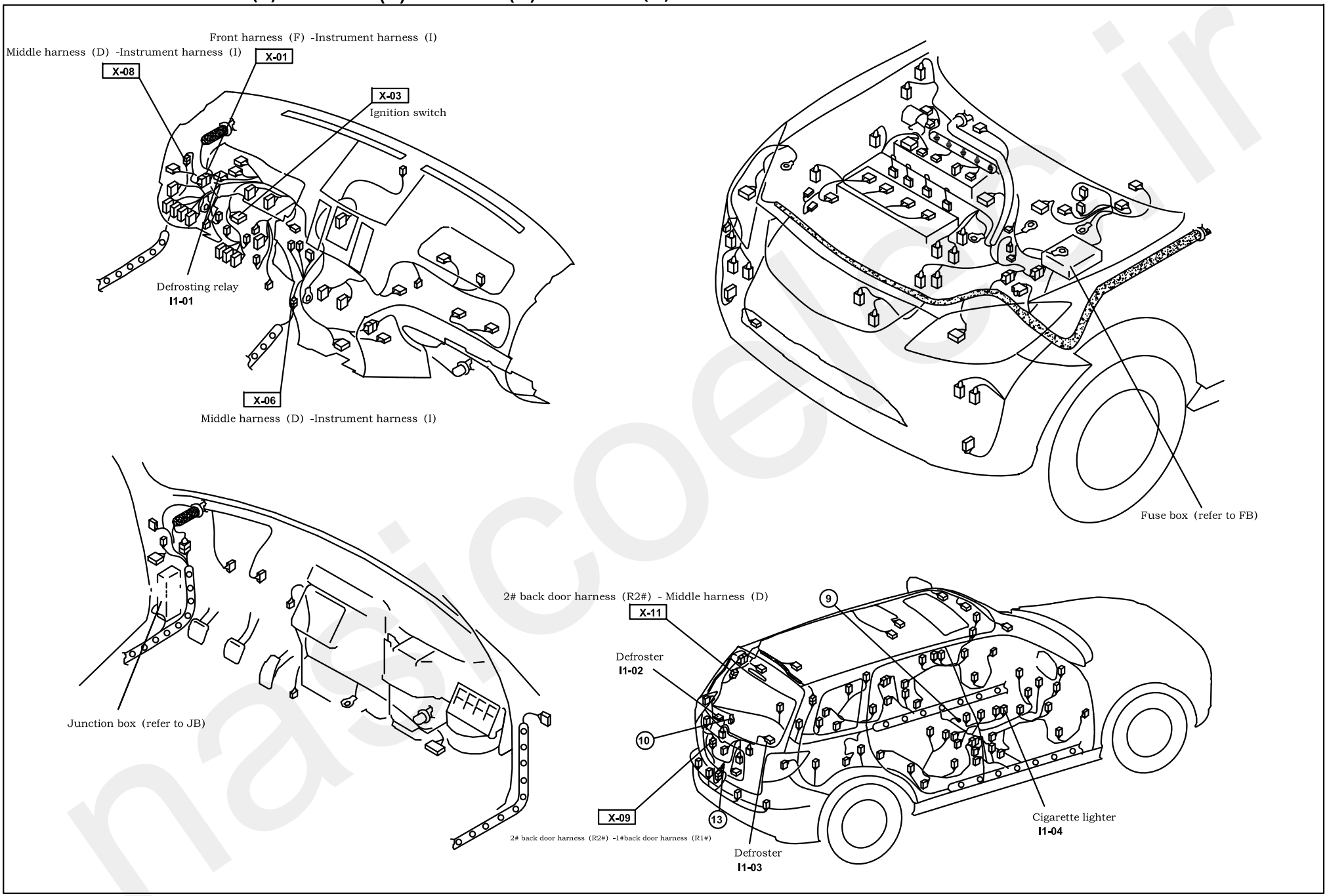

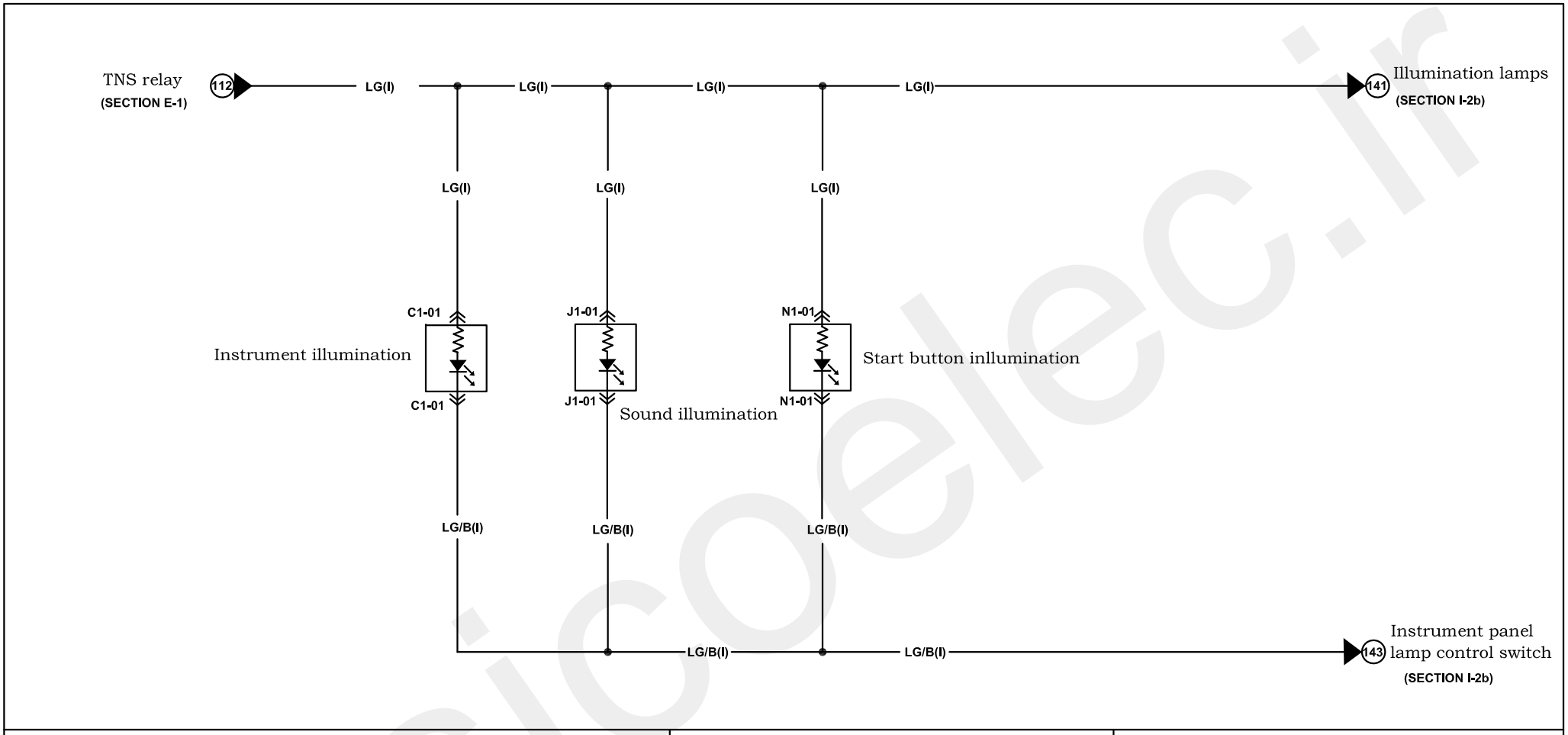

C1-01 Combined instrument (I)

( ) with **ESP**

A1 … A16

B/Y	B/L	B/W	B/R	R/Y	P	Y/G	(G/O)	(V/W)	*	*	*	*	*	*	*
LG	LG/B	*	*	*	*	*	*	*	*	*	G/B	LG/R	G/W	G/R	Y/L

A17 … A32

J1-01 Sound unit (I)

Yellow C1 / Green C2 / Blue C3

1	R/B	G	4	7	B/G	GR/B	10	*	*	*
3	*	R/Y	6	9	GR/W	Y	12	*	*	
2	R/L	G/Y	5	8	L/O	*	11	*	*	*

Black

A2	R/W	R/G	A1
	G	LG/B	
	LG	*	
A8	B	BR/Y	A7

Brown

B2	O	L	B1
	G/Y	G/R	
	G/W	G/O	
B8	L/Y	L/W	B7

N1-01 Start button (I)

R	P	R/B	LG/B	LG
P	W	G/B	*	*

10 … 6

5 … 1

Harness mark: (F) (E) (D) (R)

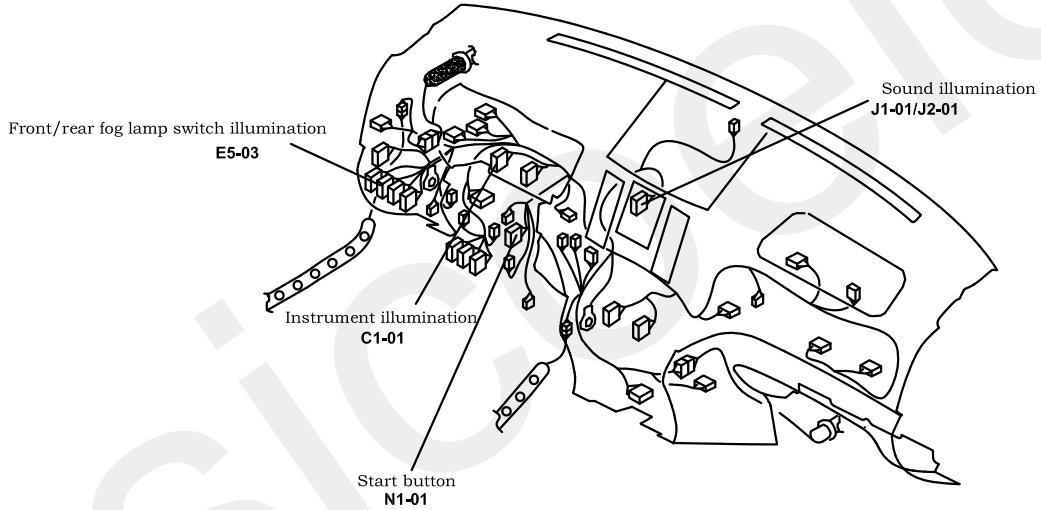

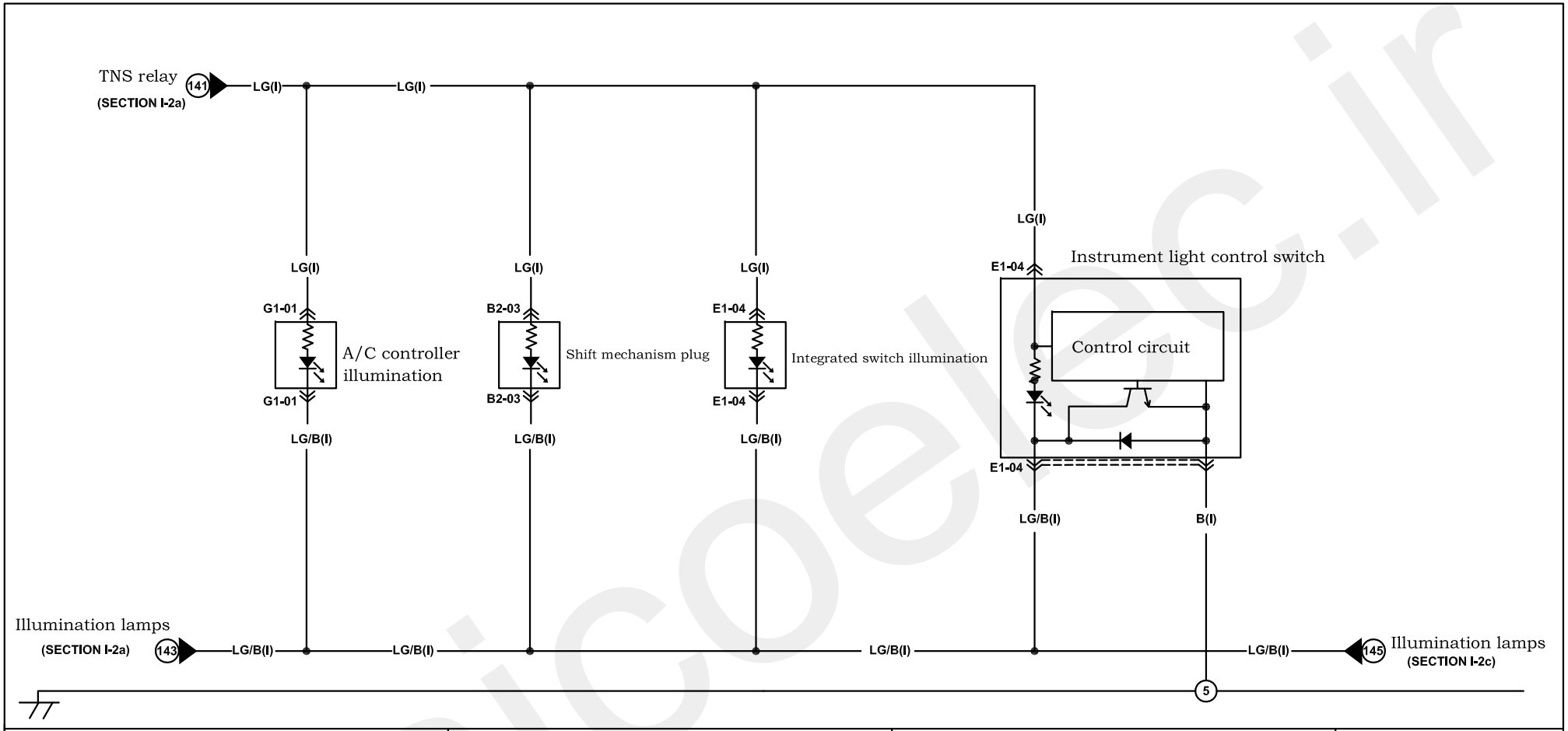

G1-01 A/C controller illumination (I) ( ) with **ESP**

D1									D10
LG	L/R	L/W	R/G	L	O	R/B	W/R	*	(GR/L)
LG/B	V	Y/B	W/L	R/L	Y	Y/G	L/Y	*	*
D11									D20

L1-01 Instrument light control switch (I)

S	Q	O	M	K	I	G	E	C	A
R/B	LG	LG/B	L/W	L	L/O	L/B	V	R/G	R/Y
B	P	G/B	&P/L	W	*	*	*	*	B
T	R	P	N	L	J	H	F	D	B

B2-03 Shift mechanism plug (I)

G	LG			Y	B/Y	A
H	LG/B	*	G/R	*	O/B	B

Harness mark: (F) (E) (D) (R)

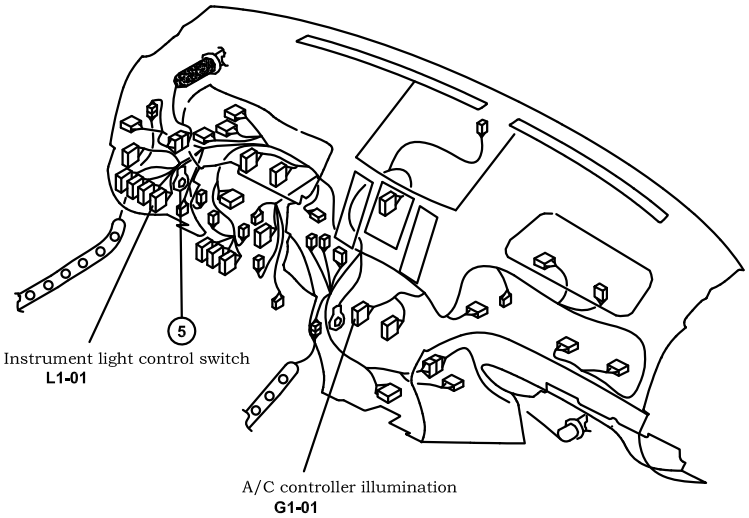

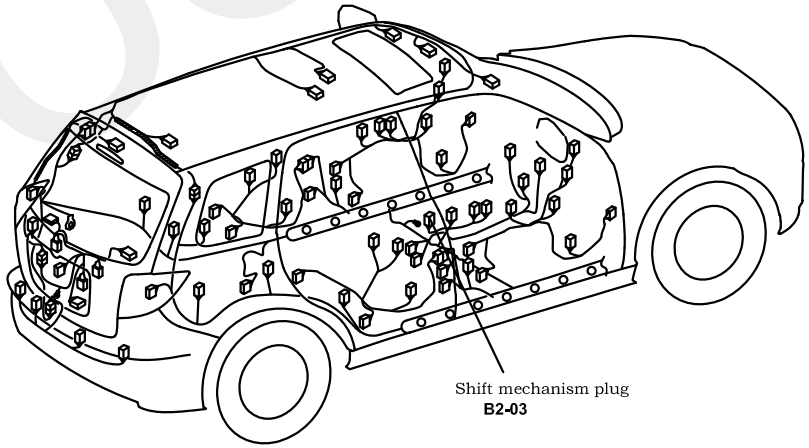

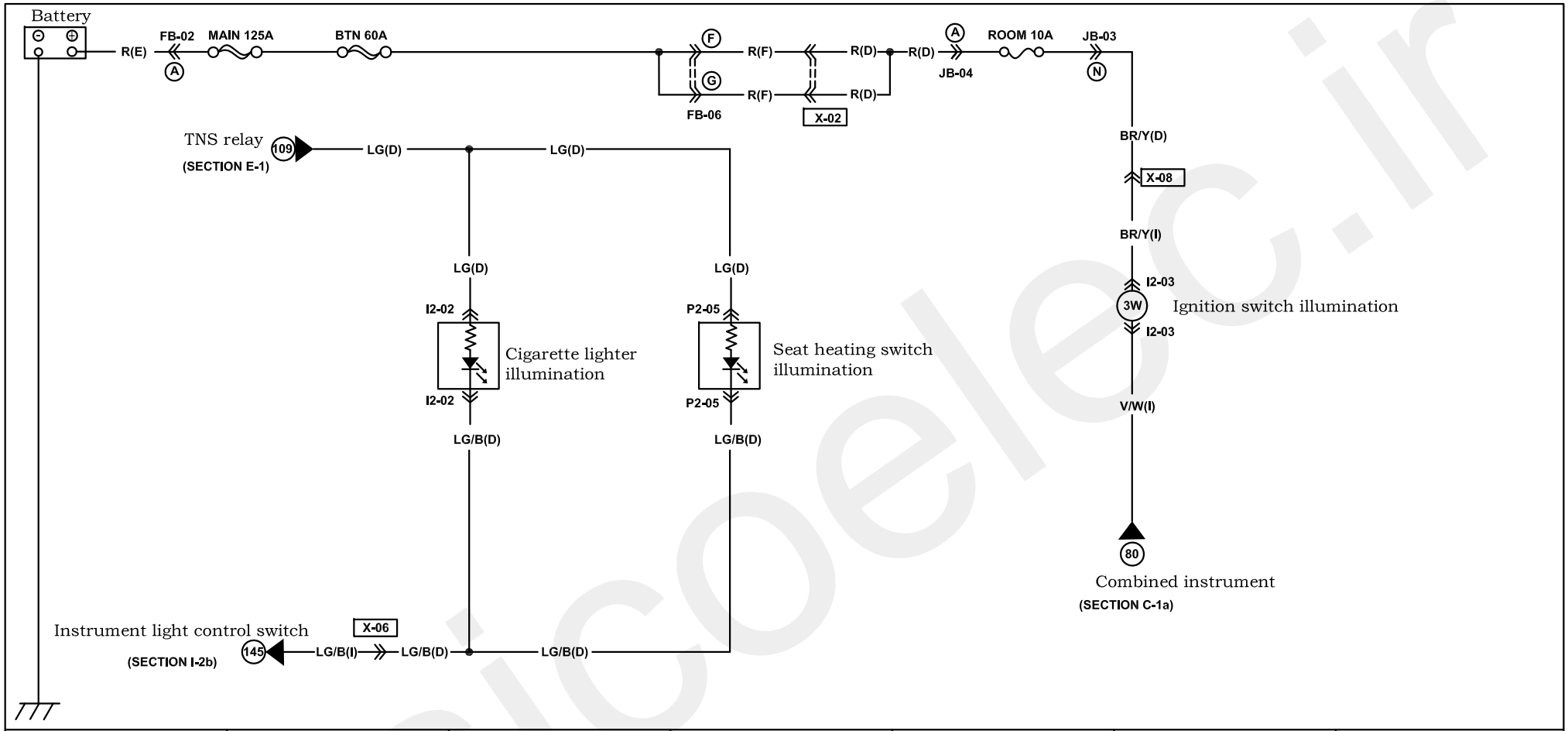

I2-02 Cigarette lighter illumination(D)

I2-03 Ignition switch illumination(I)

P2-05 Seat heating switch (D)

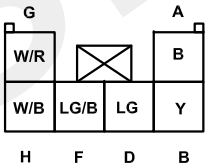

F1-01 Hazard warning lamp switch illumination (I)

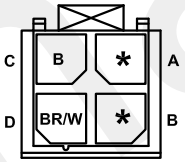

Harness mark: (F) (E) (D) (R)

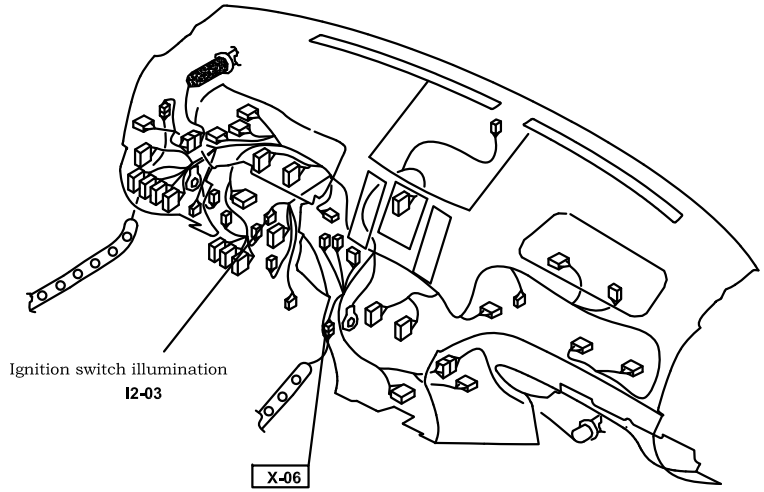

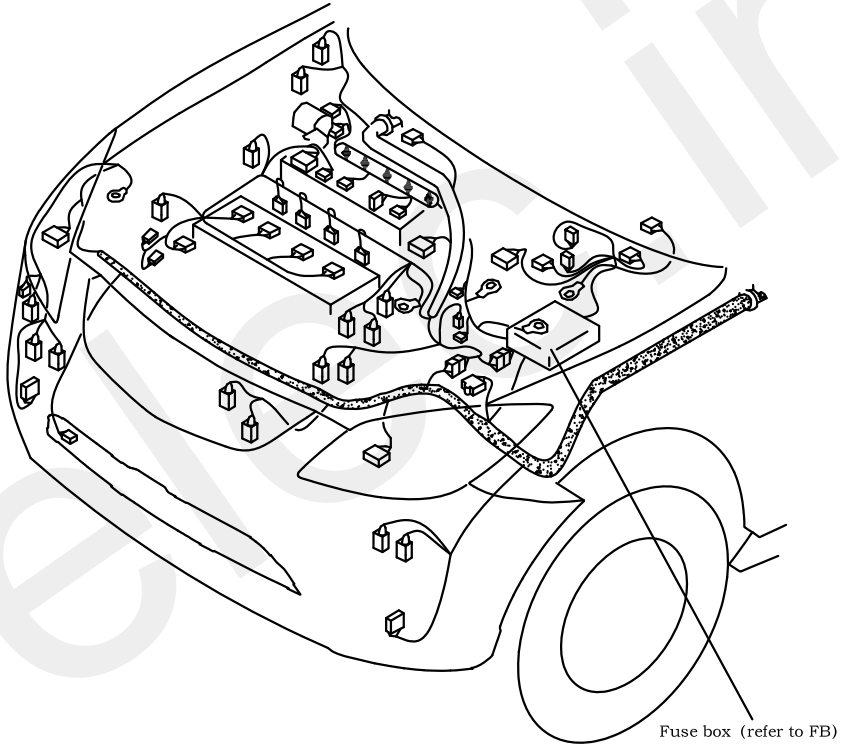

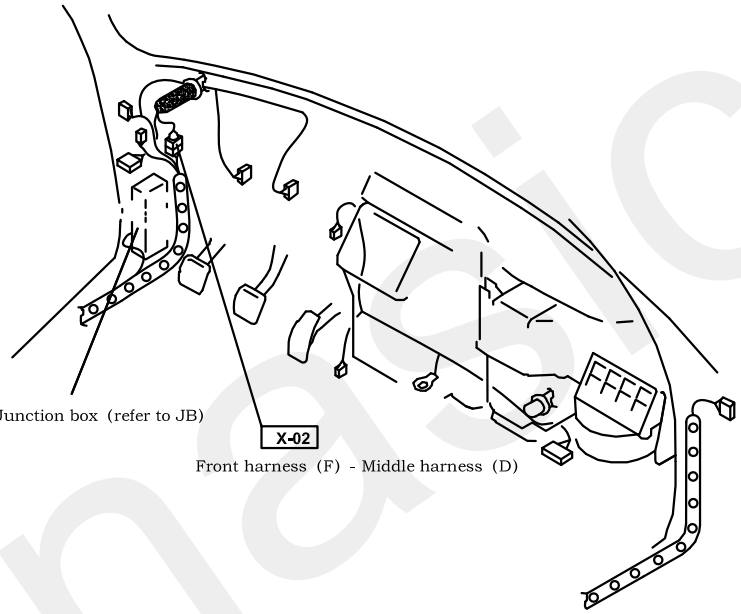

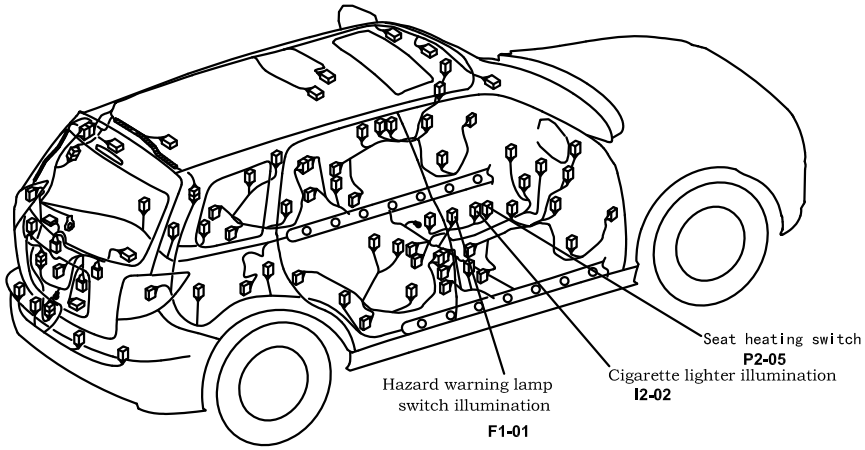

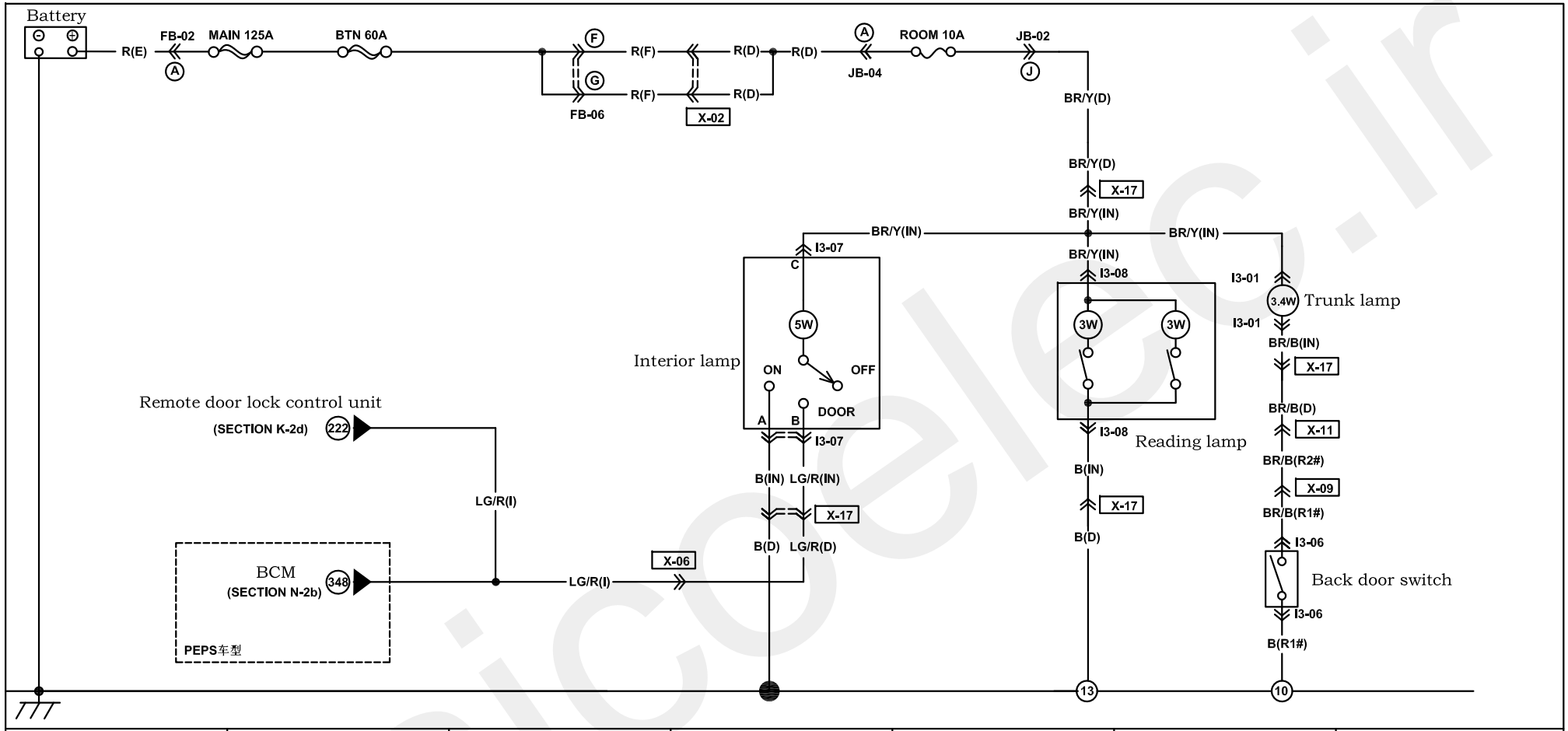

I3-01 Trunk lamp (IN) BR/B BR/Y	I3-06 Trunk lamp switch (R1#) BR/B B	I3-07 Interior lamp (IN) BR/Y LG/R B C B A				
I3-08 Reading lamp (IN) B L/R BR/Y						

Harness mark: (F) (E) (D) (R)

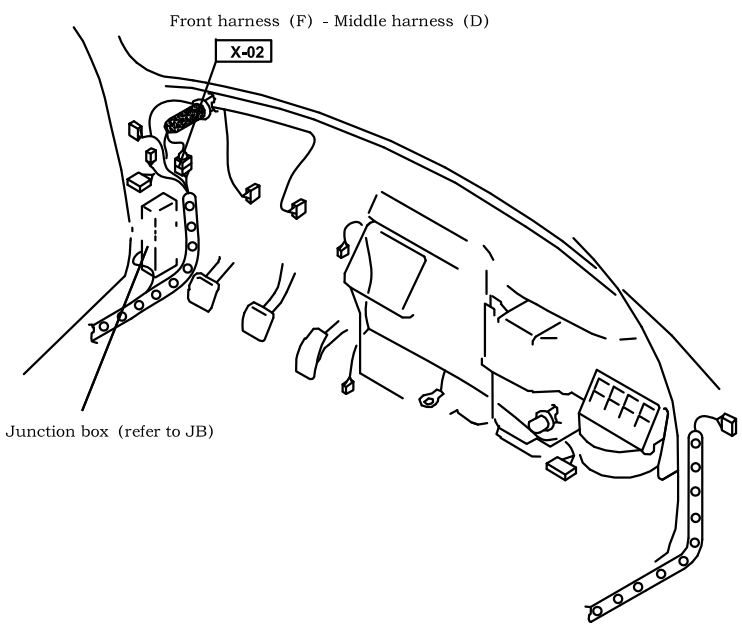

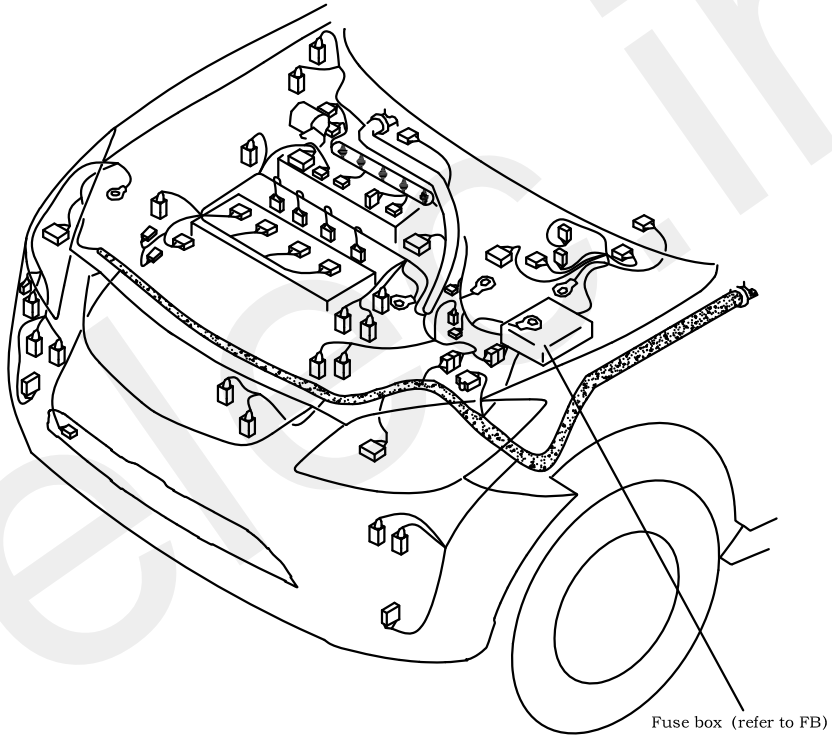

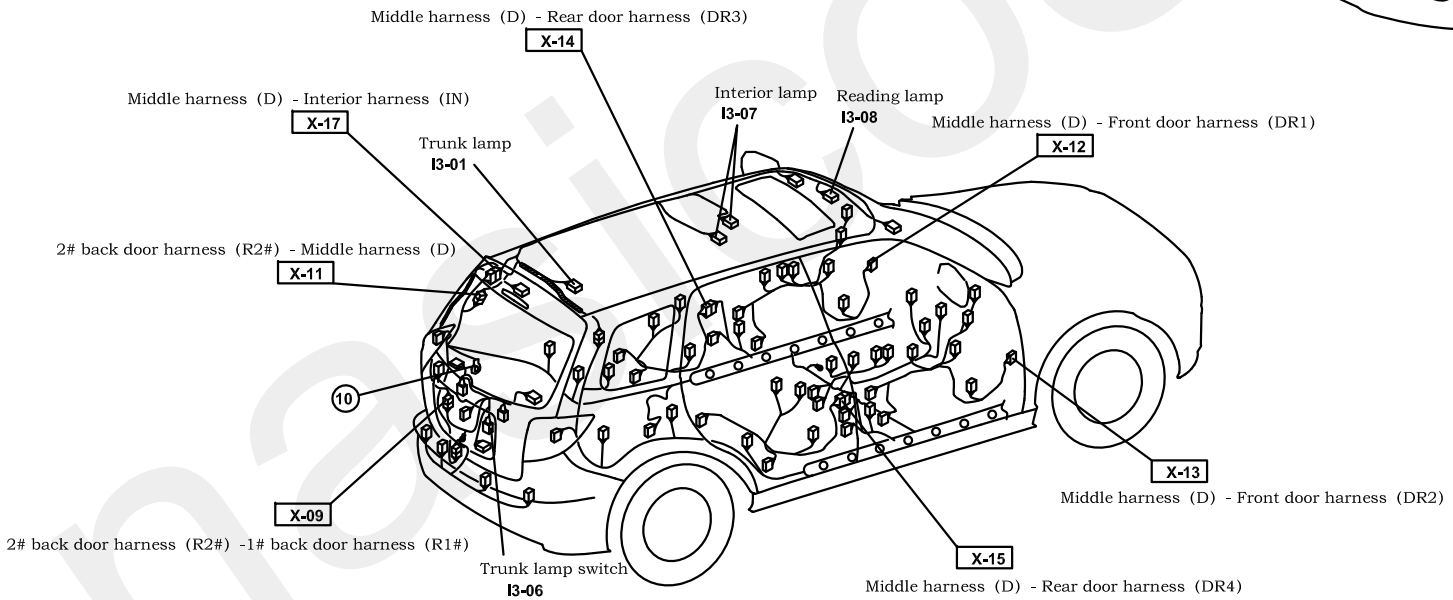

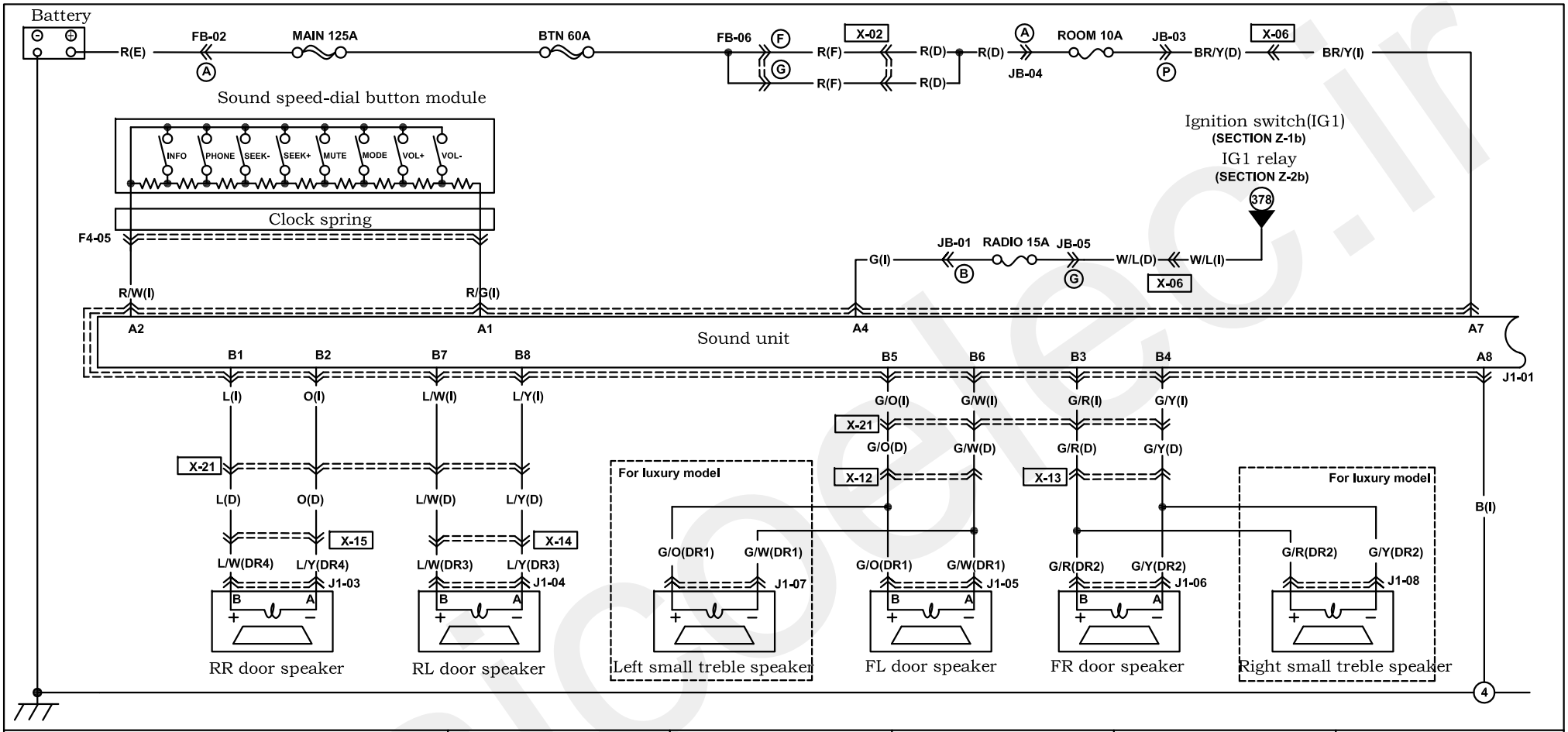

J1-01 Sound unit (I)

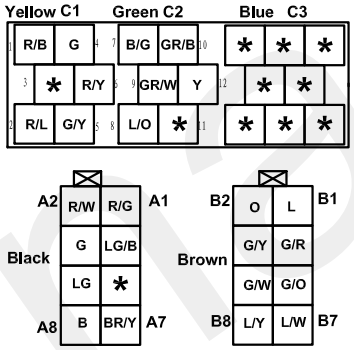

J1-03 RL door speaker(DR3)

J1-04 RR door speaker(DR4)

J1-05 FL door speaker(DR1)

J1-06 FR door speaker (DR2)

F4-05 Sound speed-dial button module (I)

[ ] with cruise

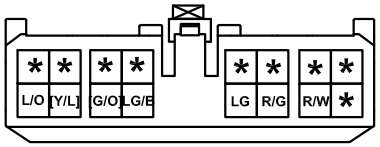

Harness mark: (F) (E) (D) (R)

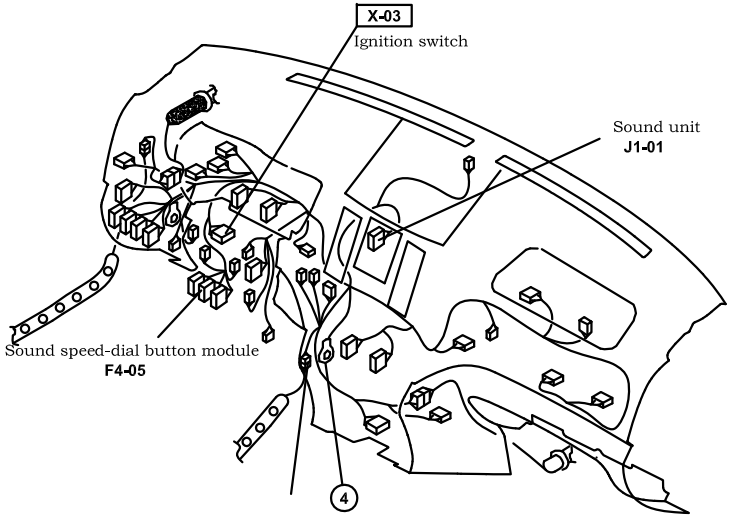

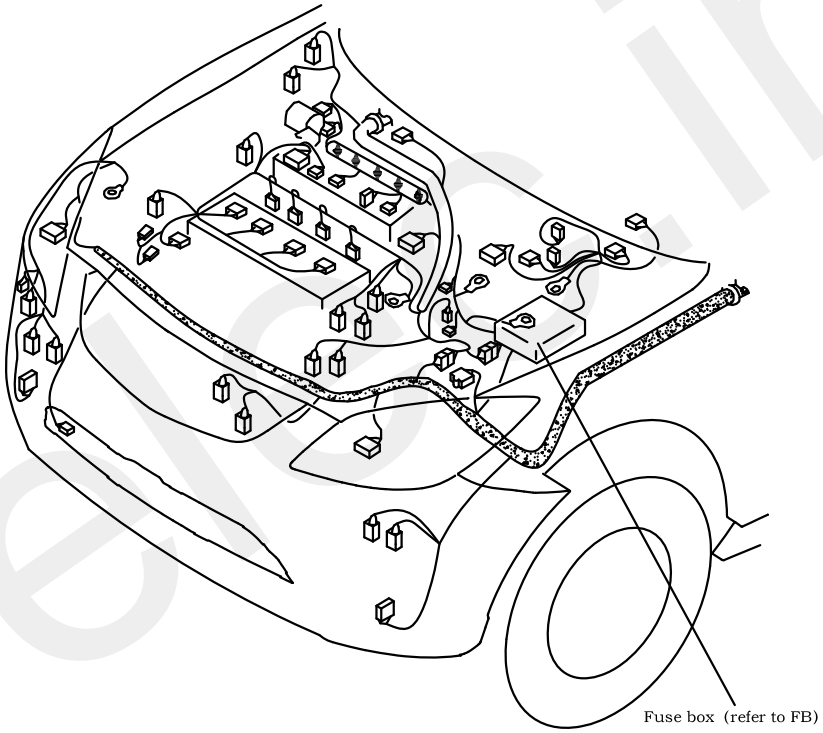

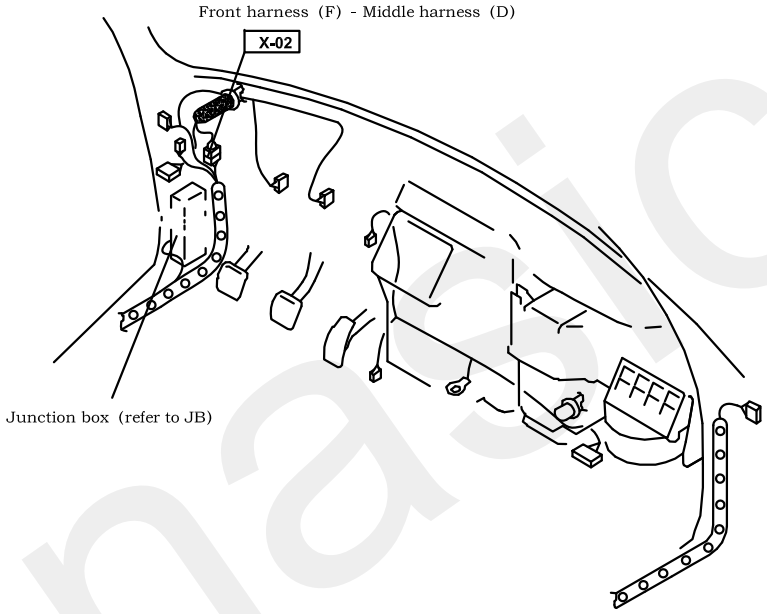

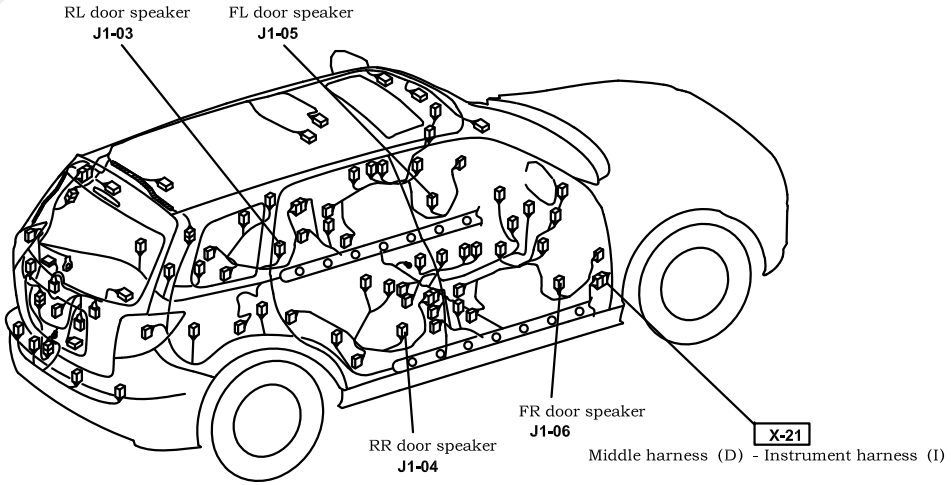

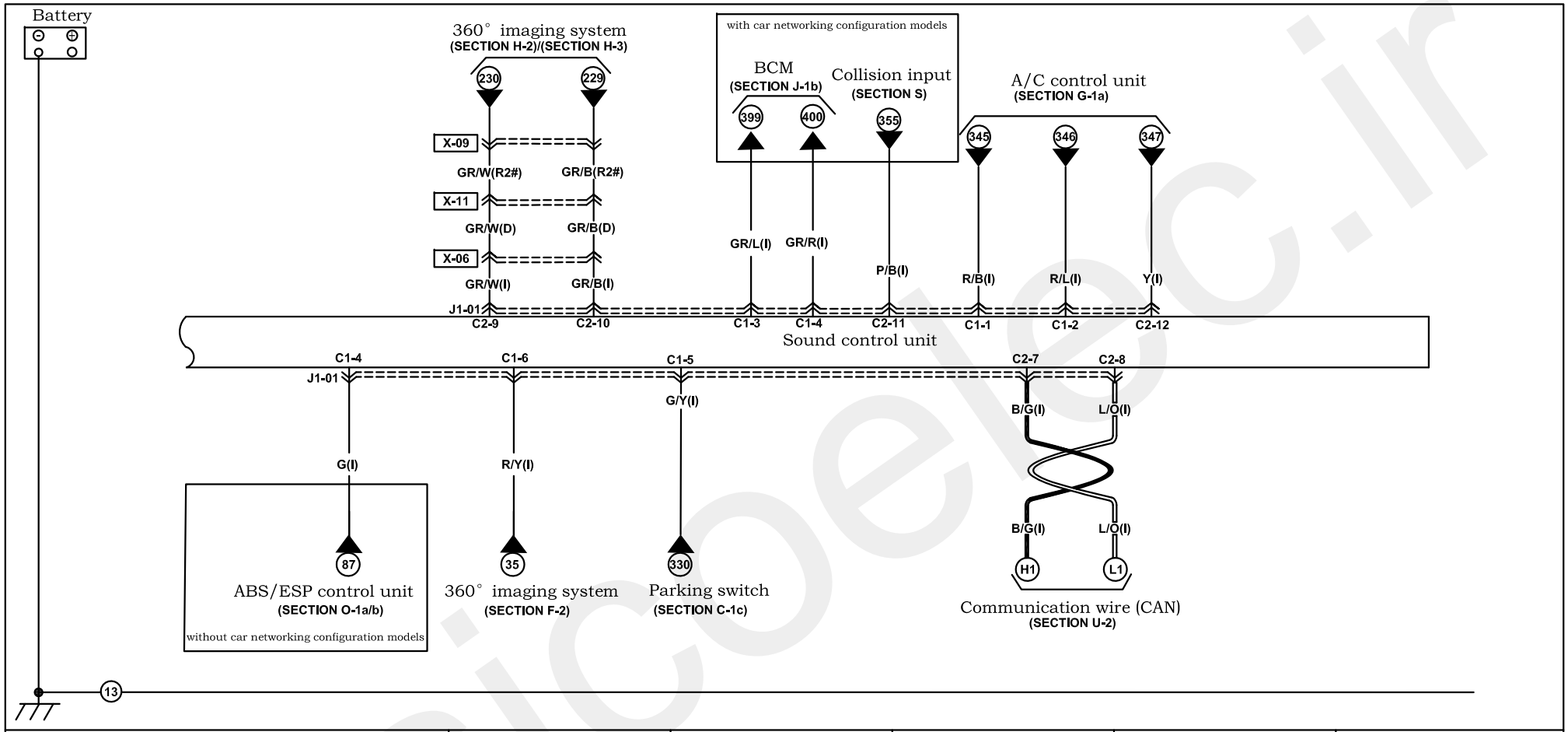

J1-01 Sound control unit (I) **!with car networking configuration models**

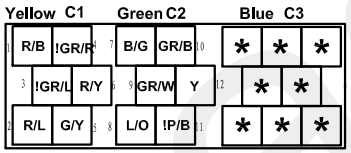

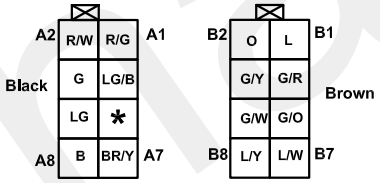

Harness mark: (F) (E) (D) (R)

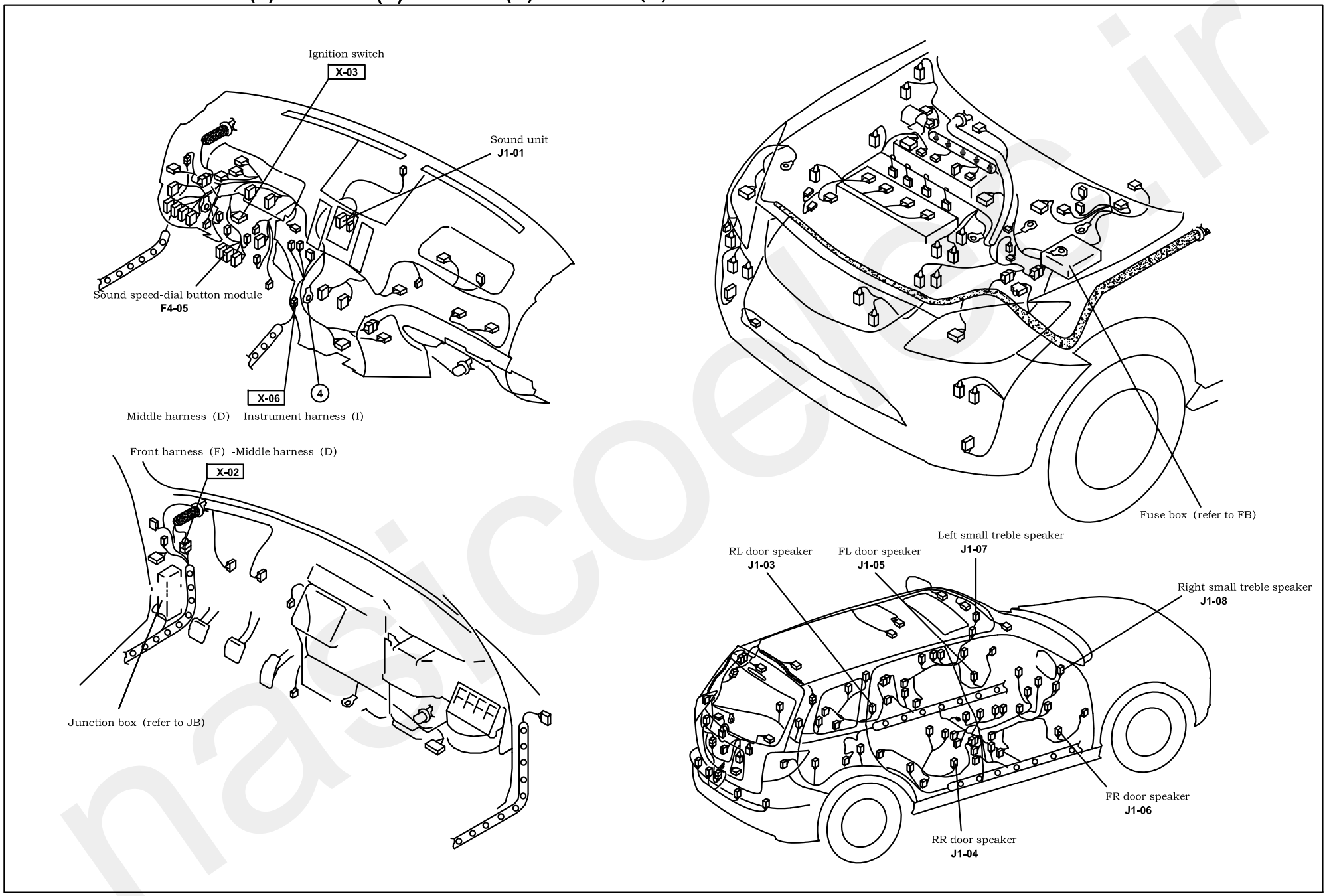

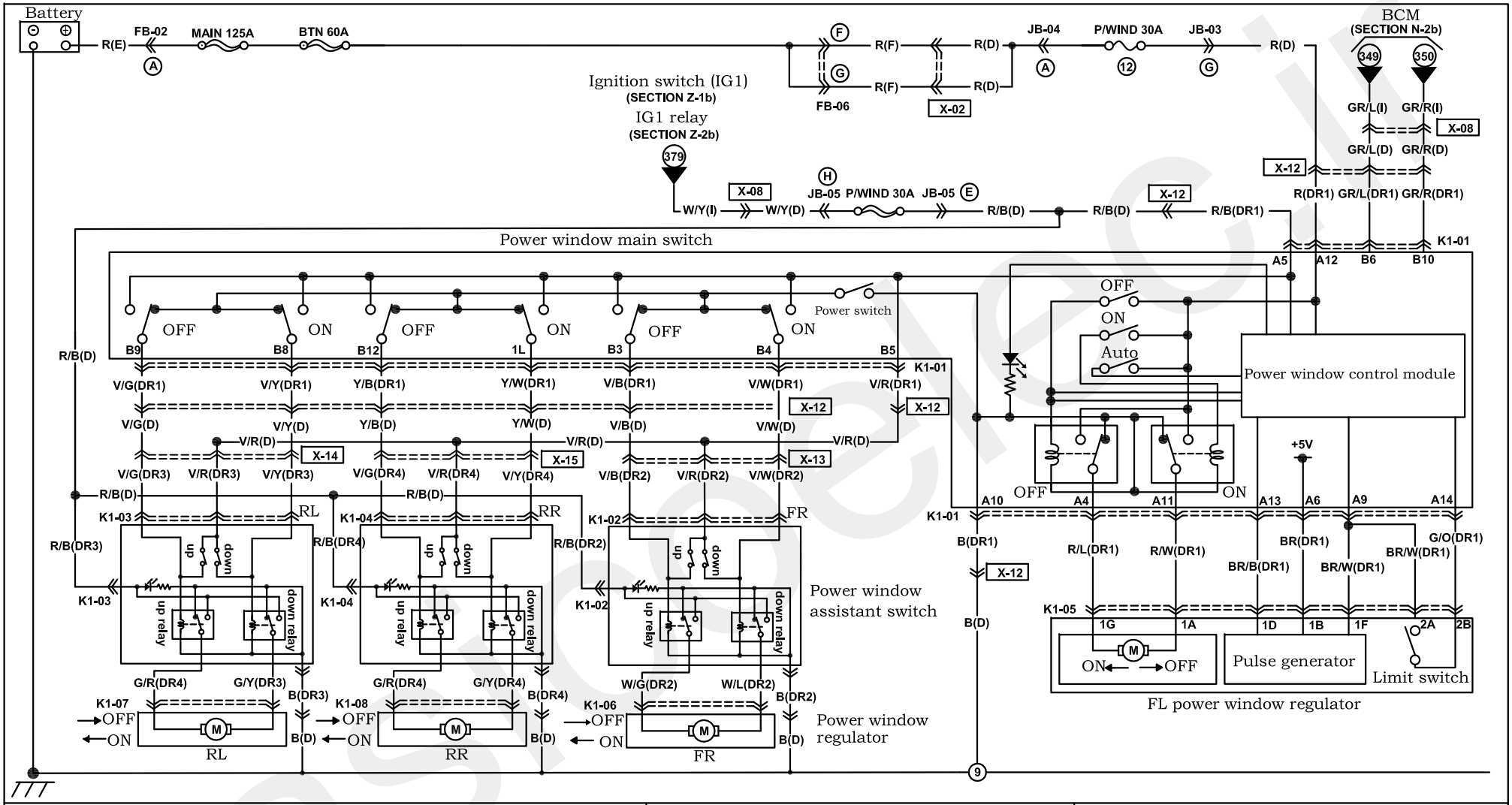

K1-01
Power window main switch (DR1)

A1						A7
*	*	*	R/L	R/B	BR	*
*	BR/W	B	R/W	R	BR/B	G/O
A8						A14

B1					B6
*	*	V/B	V/W	V/R	GR/L
*	V/Y	V/G	GR/R	Y/W	Y/B
B7					B12

K1-02
FR power window
assistant switch (DR2)

C1					C6
V/W	*	W/G	V/R	B	*
V/B	R/B	W/L	*	*	*
C7					C12

K1-03
RL power window
assistant switch (DR3)

C1					C6
V/Y	*	G/R	V/R	B	*
V/G	R/B	G/Y	*	*	*
C7					C12

K1-06
FR power window regulator (DR2)

W/G
W/L

K1-07
RL power window regulator (DR3)

G/Y
G/R

K1-08
RR power window regulator (DR4)

G/Y
G/R

K1-04
RR power window
assistant switch (DR4)

C1					C6
V/Y	*	G/R	V/R	B	*
V/G	R/B	G/Y	*	*	*
C7					C12

K1-05 FL power window regulator (DR1)

G/O
BR/W

1A	R/W			R/L
1B	BR	BR/B	BR/W	*
				1F

Harness mark: (F) (E) (D) (R)

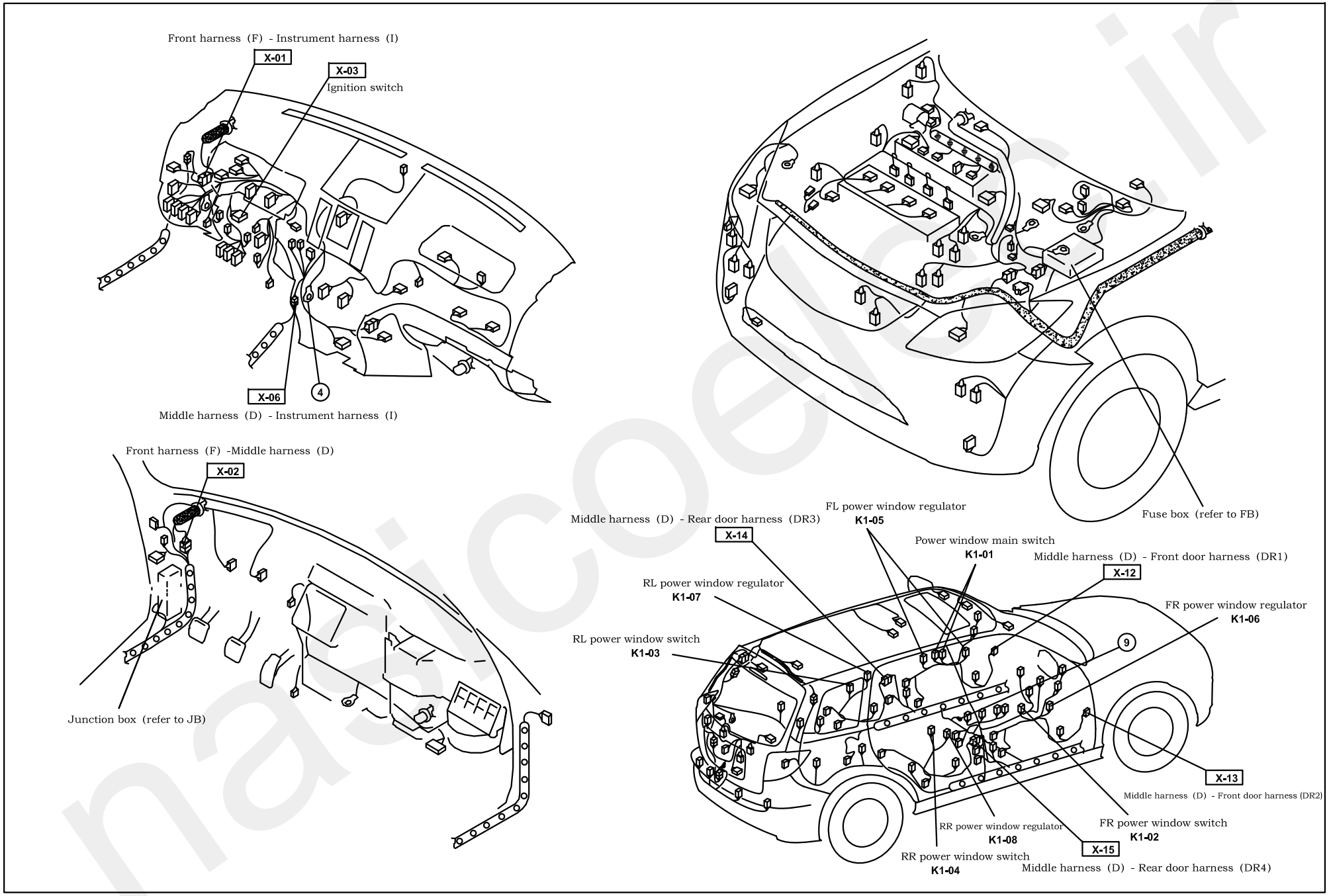

Remote and central door lock system

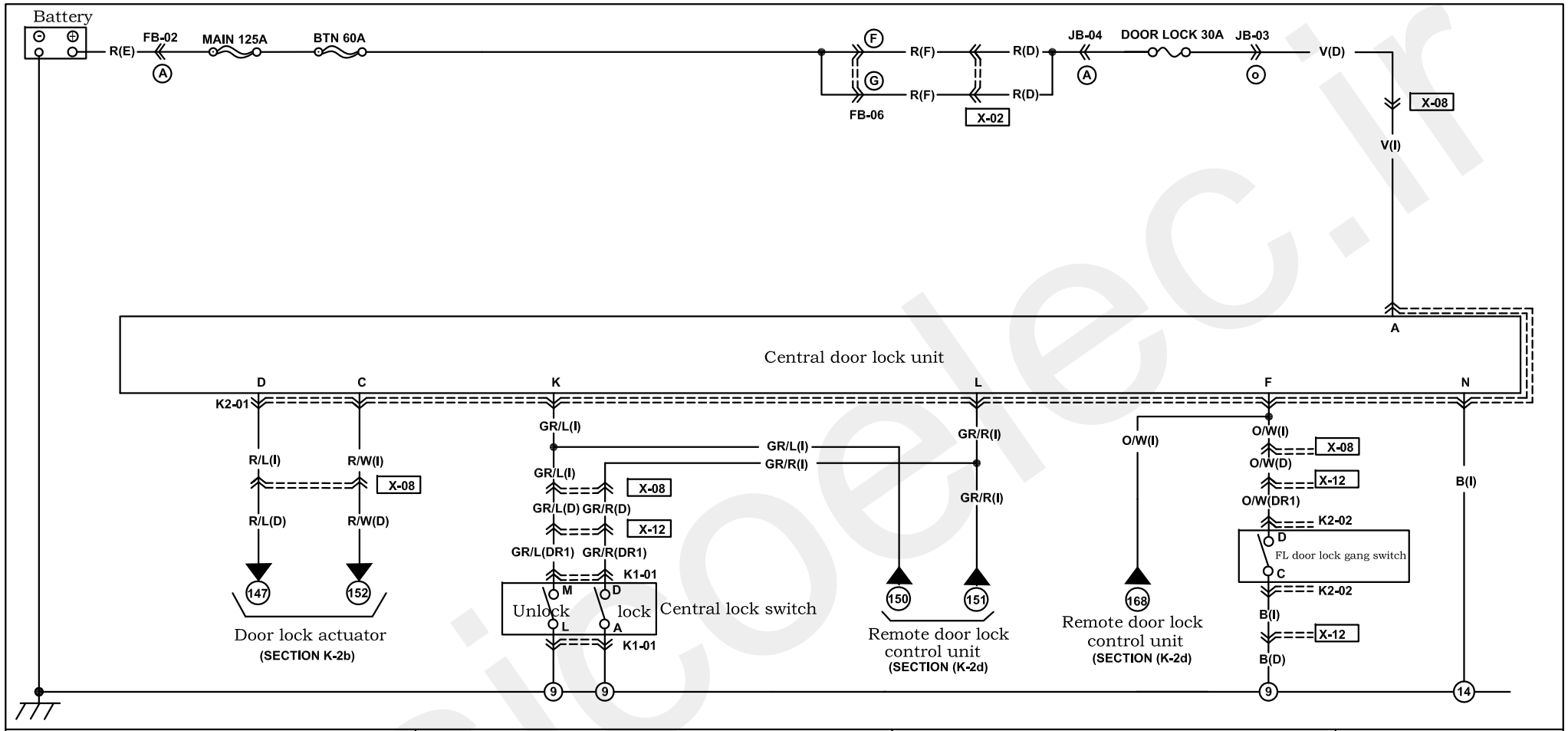

K2-01 Central door lock unit (D)

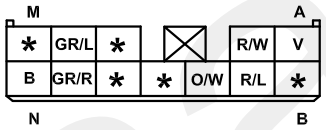

K1-01 Power window main switch (DR1)

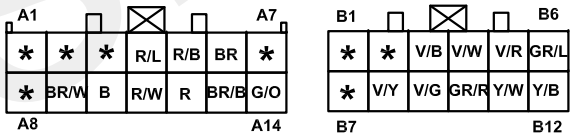

K2-02 FL door lock actuator (DR1)

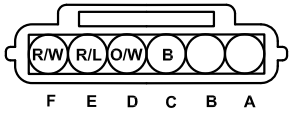

Harness mark: (F) (E) (D) (R)

Middle harness (D) - Instrument harness (I)

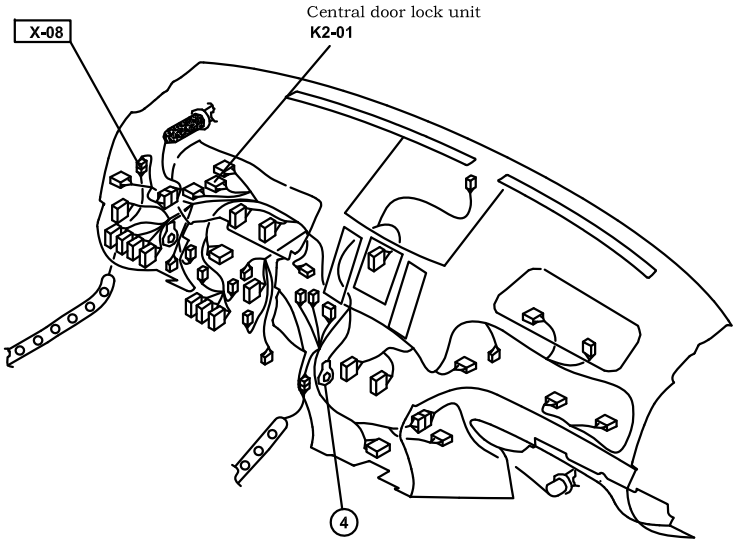

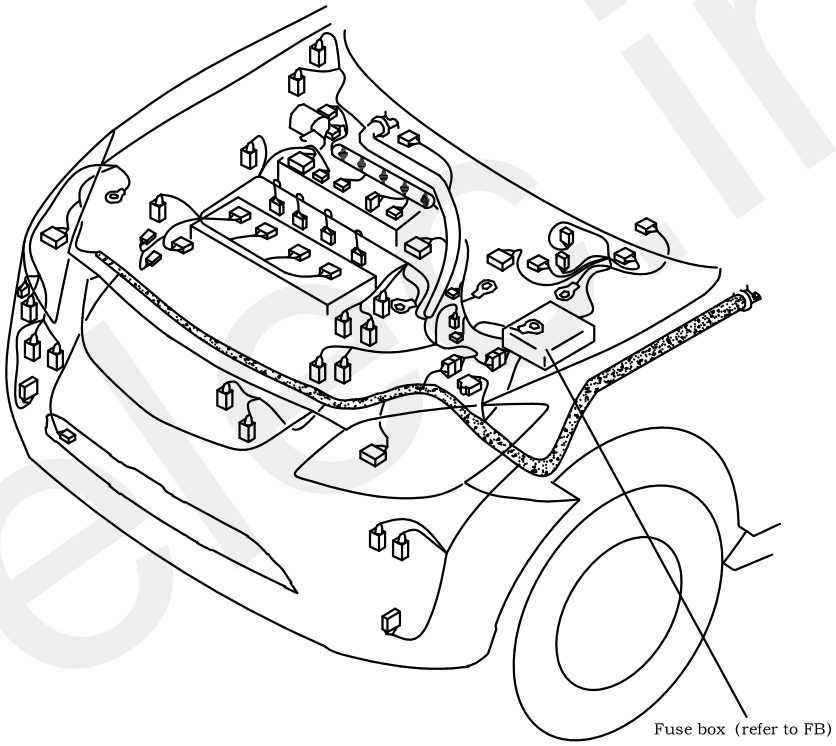

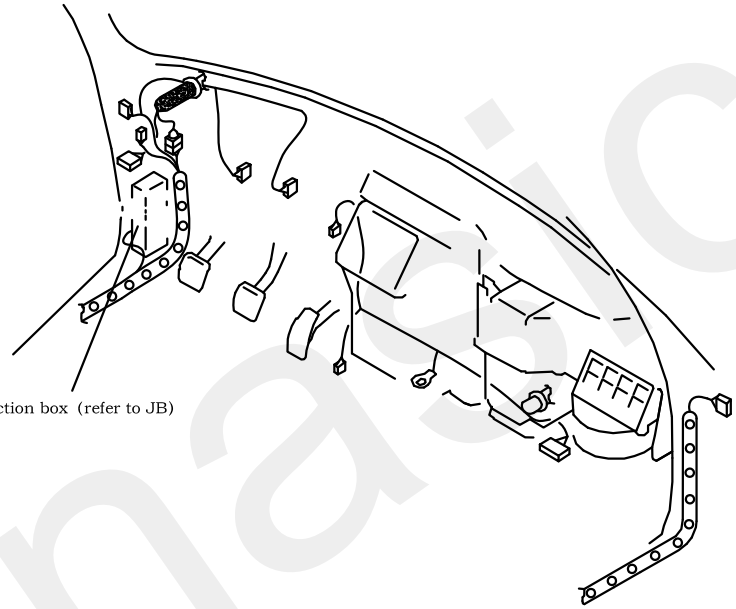

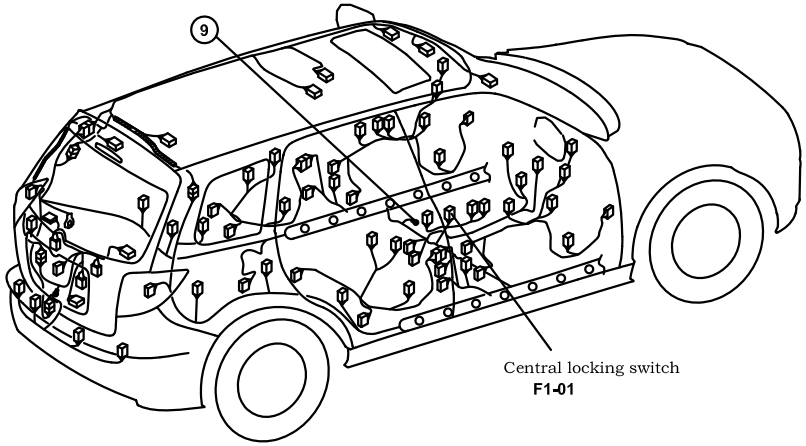

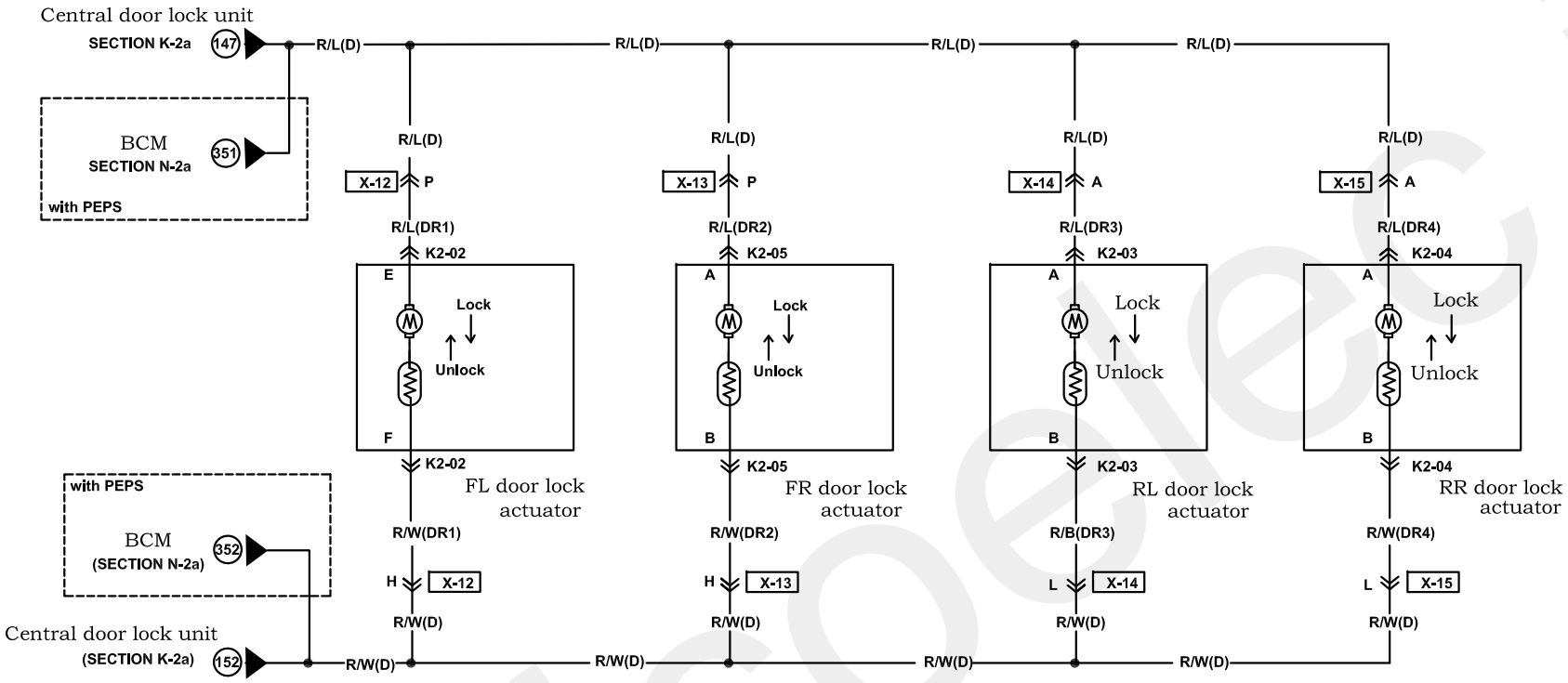

K2-02 FL door lock actuator (DR1)

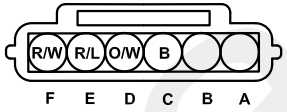

K2-04 RR door lock actuator (DR4)

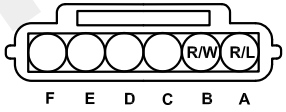

K2-03 RL door lock actuator (DR3)

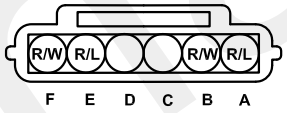

K2-05 FR door lock actuator (DR2)

$ with **PEPS**

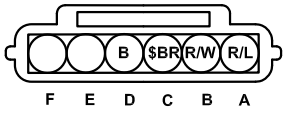

Harness mark: (F) (E) (D) (R)

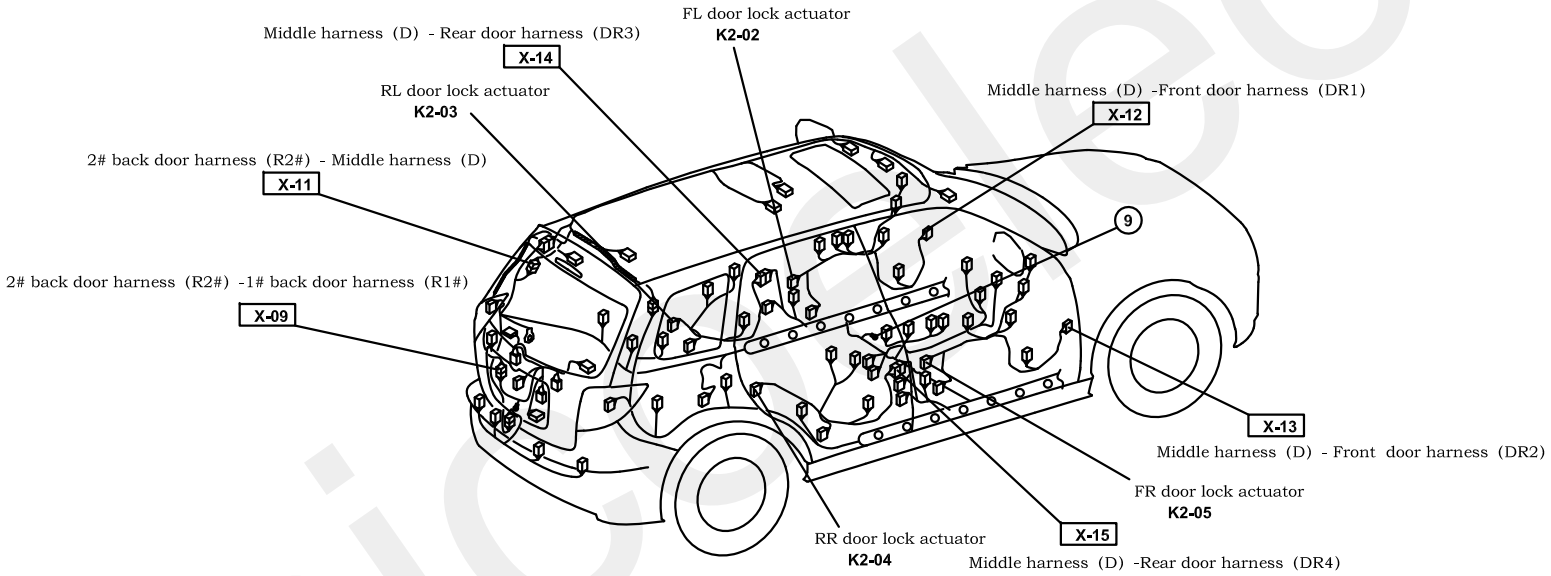

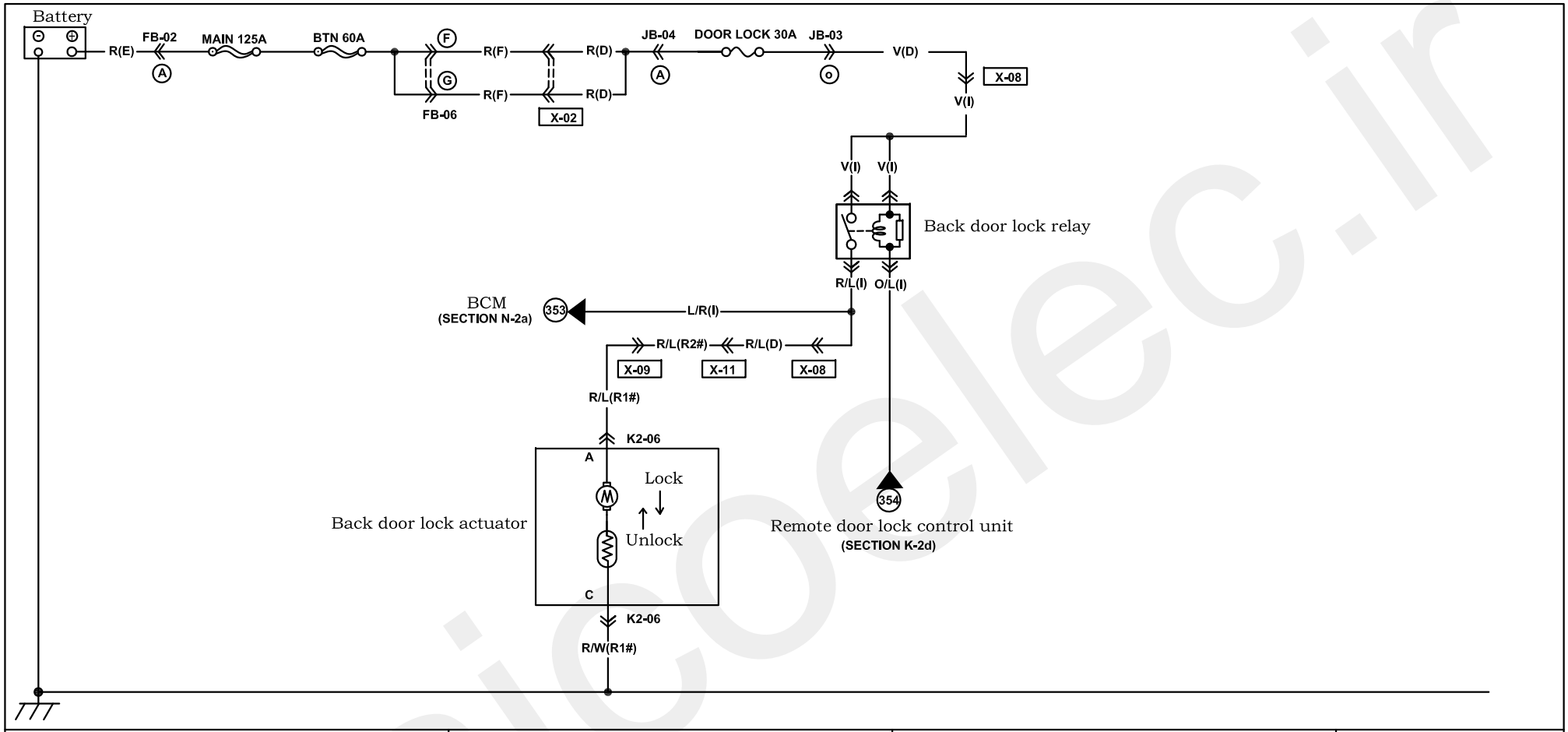

K2-06 Back door open motor (R1#)

E	D	C	B	A
*	*	L/R	*	B

Harness mark: (F) (E) (D) (R)

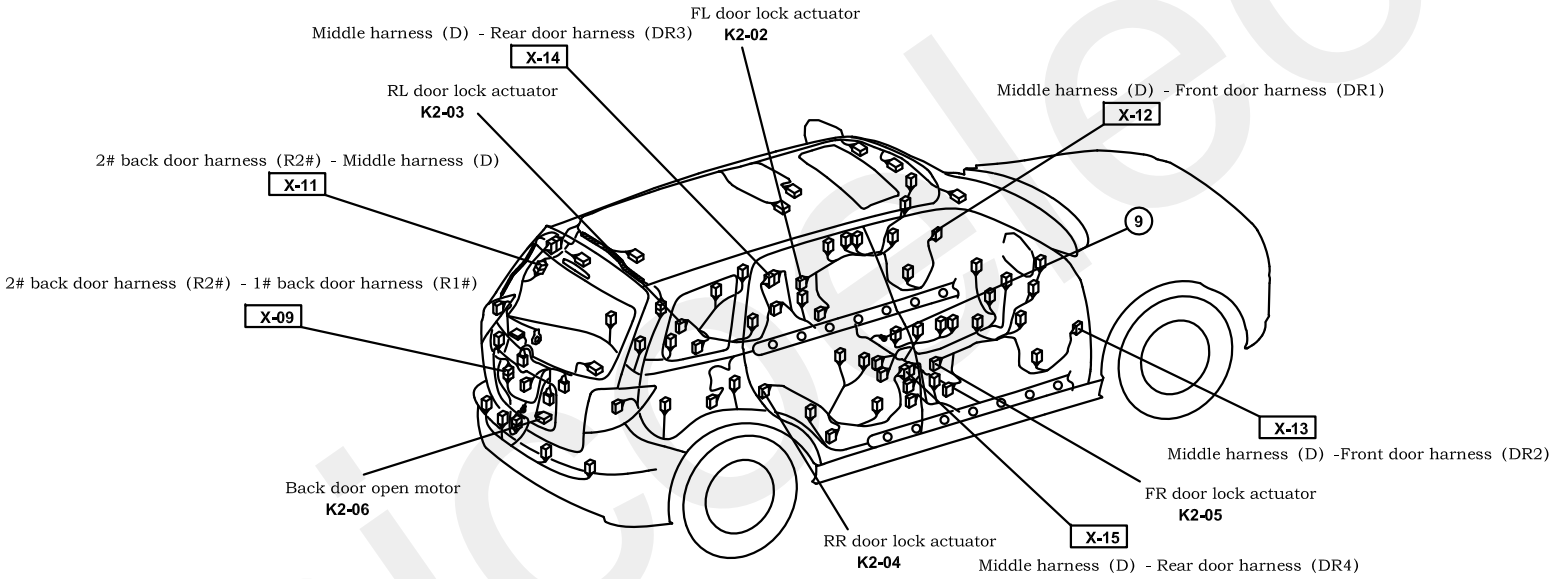

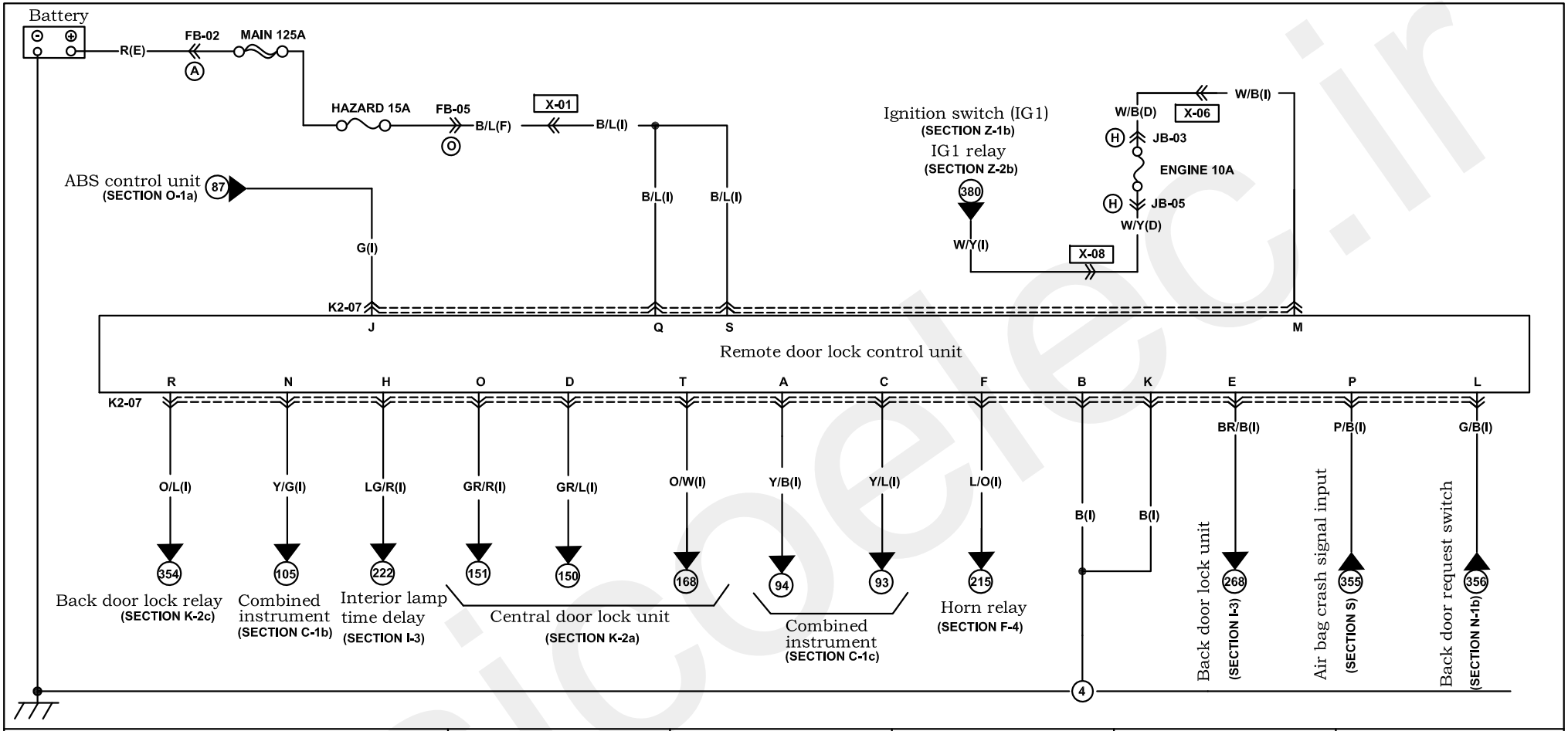

K2-07 Remote door lock control unit (I)

S	Q	O	M	K	I	G	E	C	A
B/L	B/L	GR/R	W/B	B	*	*	BR/B	Y/L	Y/B
O/W	O/L	P/B	Y/G	G/B	G	LG/R	L/O	GR/L	B
T	R	P	N	L	J	H	F	D	B

Harness mark: (F) (E) (D) (R)

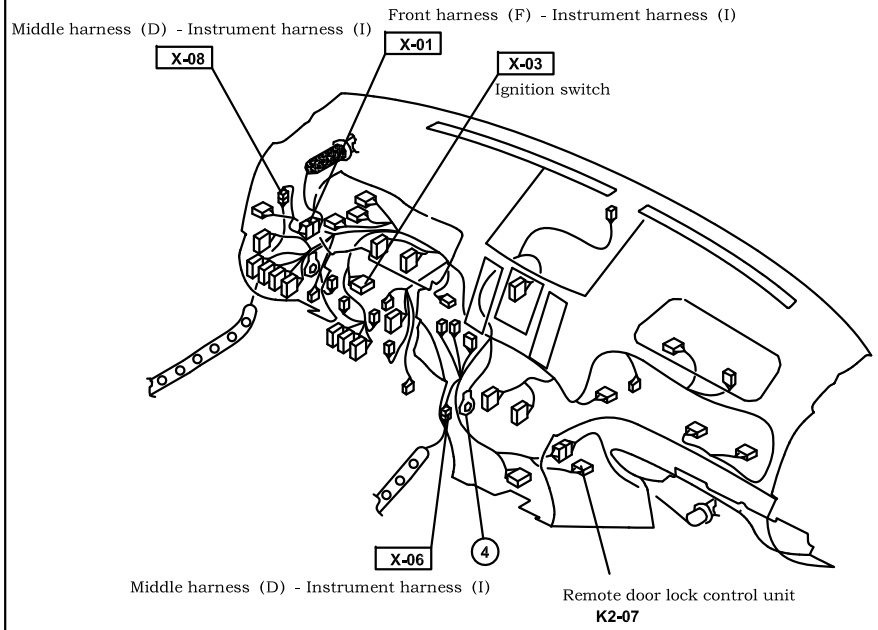

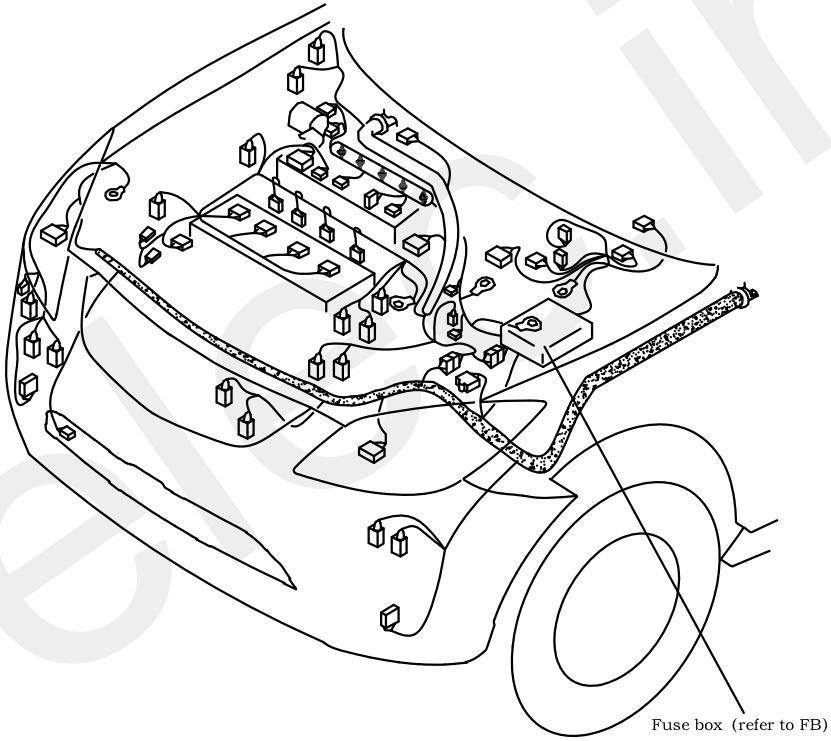

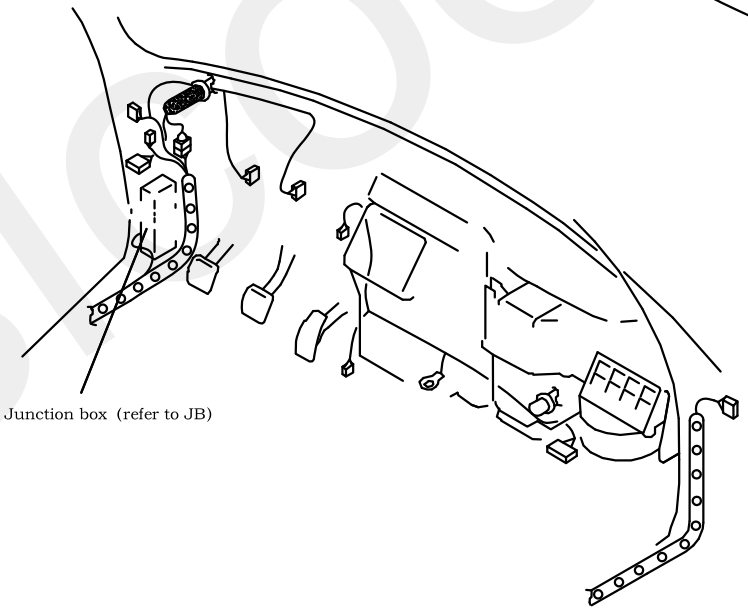

Exterior rearview mirror heater / Power exterior rearview mirror

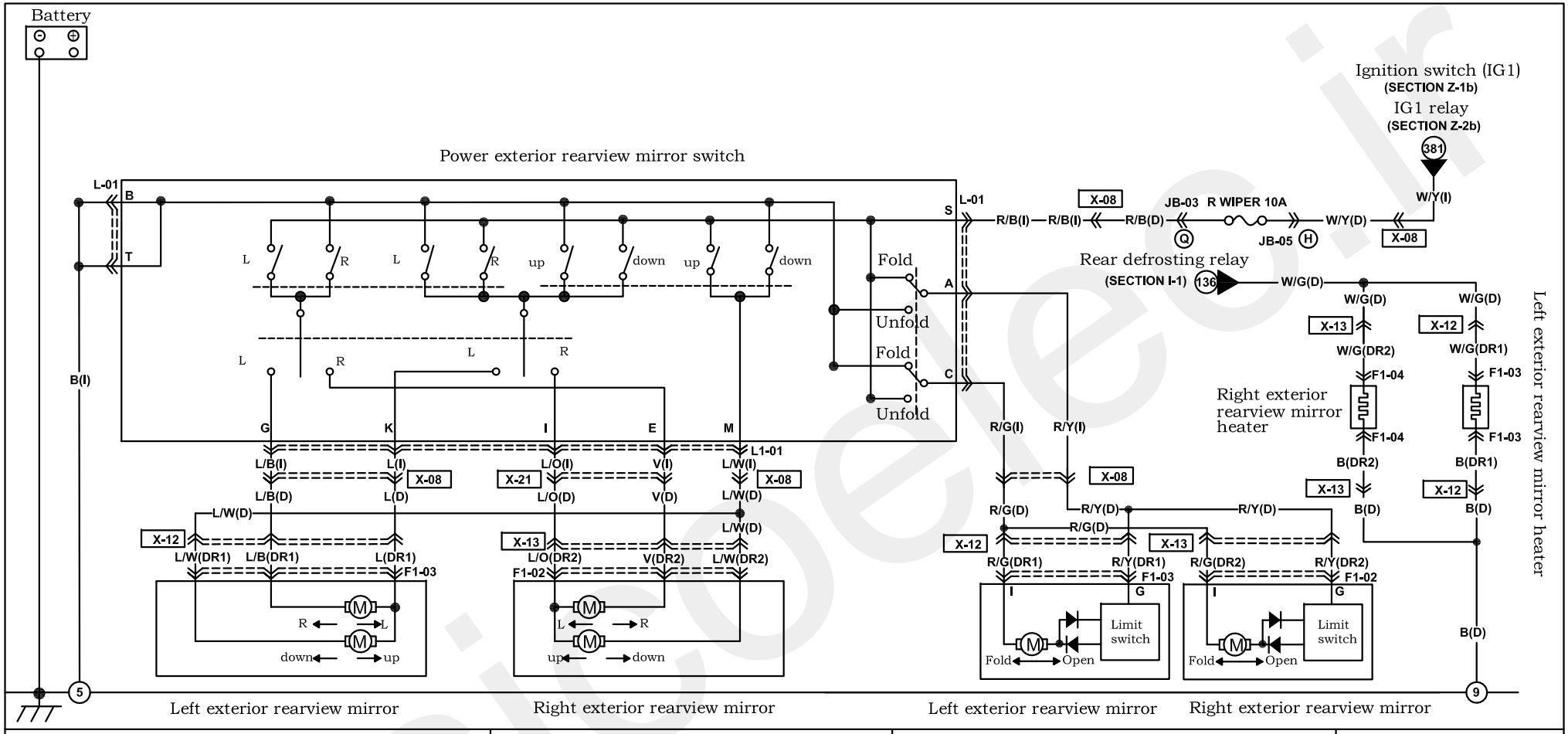

L-01 Integrated switch (I) & with start-stop system

S	Q	O	M	K	I	G	E	C	A
R/B	LG	LG/B	L/W	L	L/O	L/B	V	R/G	R/Y
B	P	G/B	* &P/L	W	*	*	*	*	B
T	R	P	N	L	J	H	F	D	B

F1-03 Left exterior rearview mirror (DR1)

A	*	Y/L	W/G	R/Y	R/G	I
B	*	L	L/W	L/B	B	J

F1-04 Left exterior rearview mirror (DR2)

A	*	Y/B	W/G	R/Y	R/G	I
B	*	L/O	L/W	V	B	J

Harness mark: (F) (E) (D) (R)

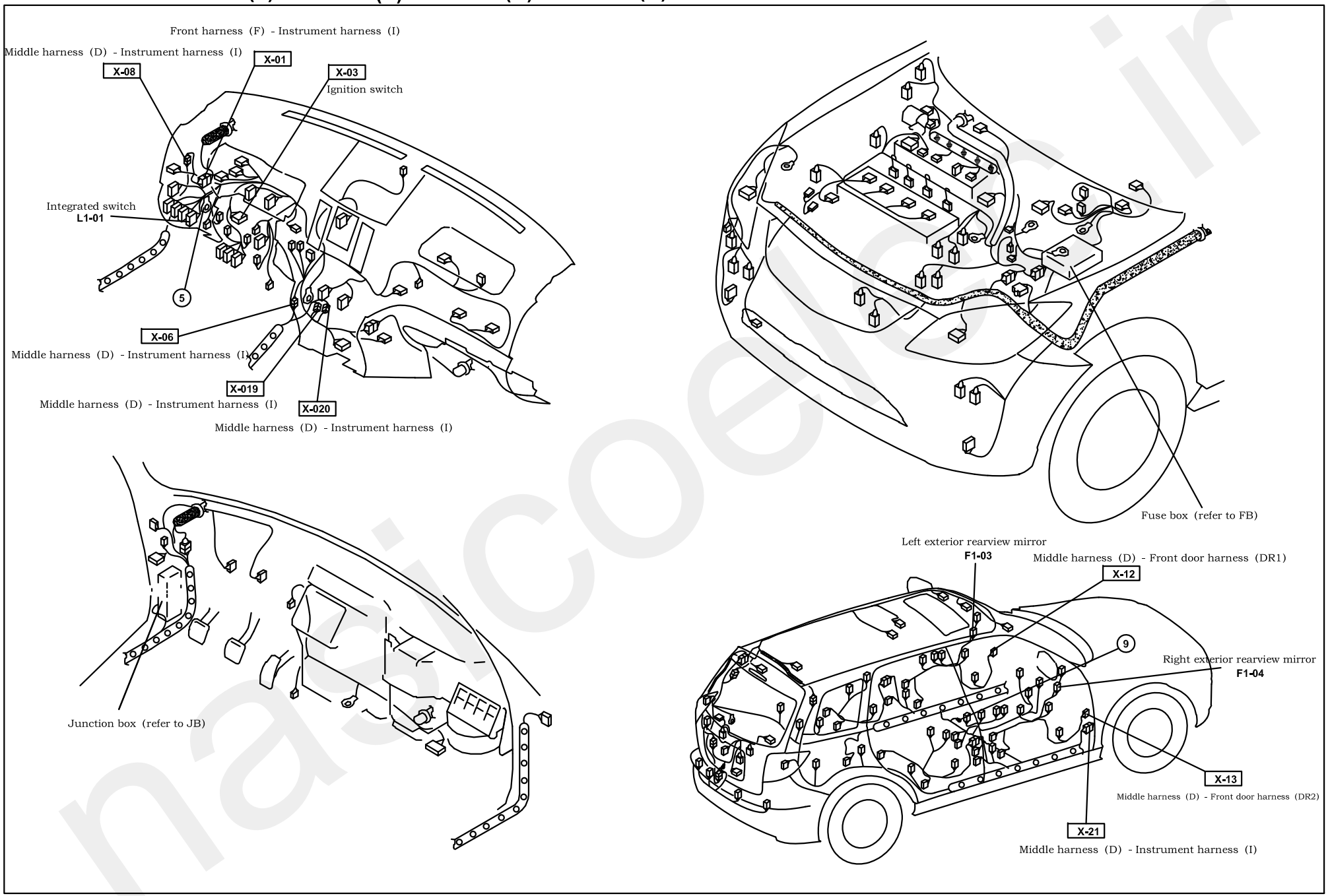

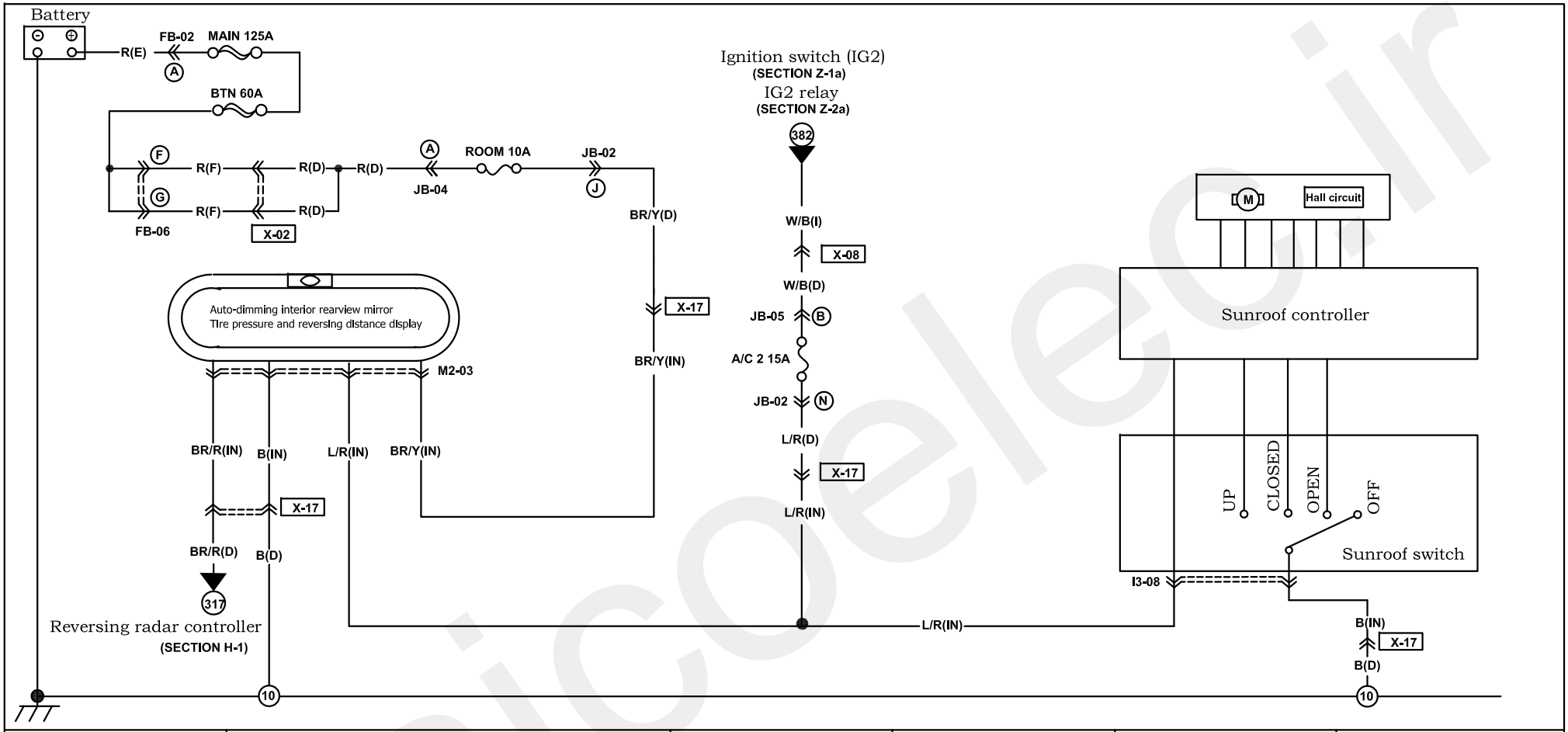

I3-08 Sunroof switch (IN)

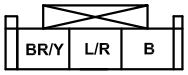

M2-03 Auto-dimming interior rearview mirror (IN)

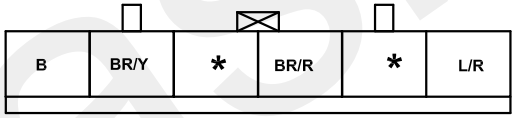

Harness mark: (F) (E) (D) (R)

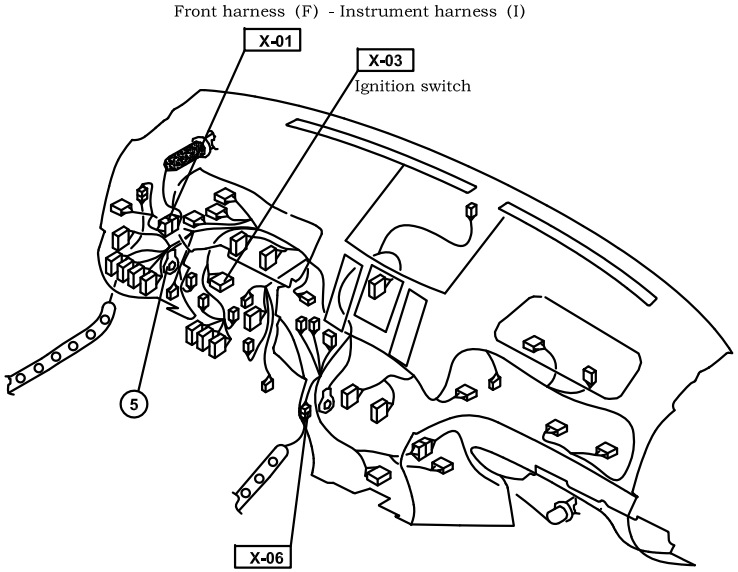

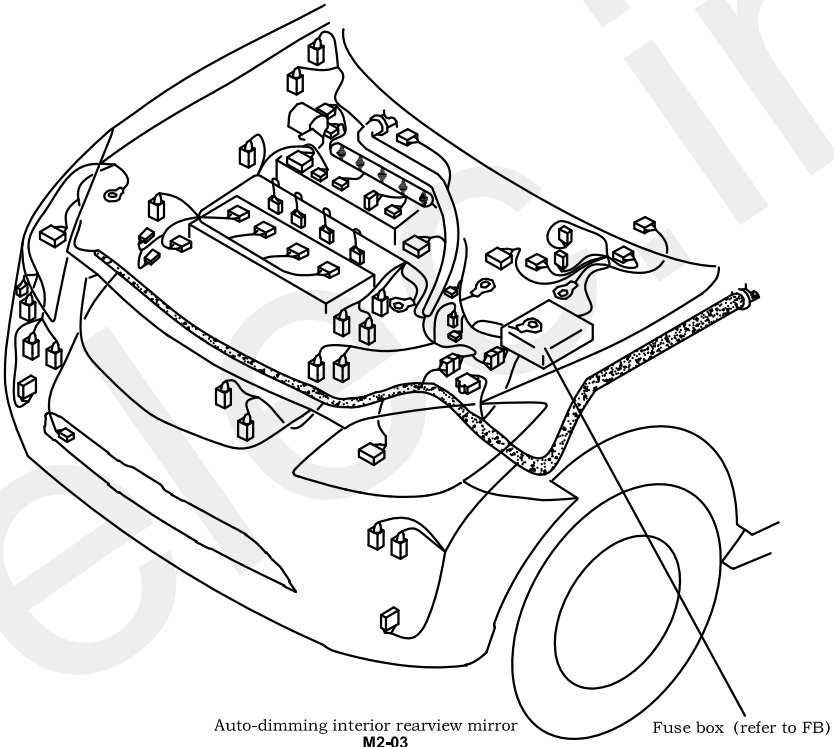

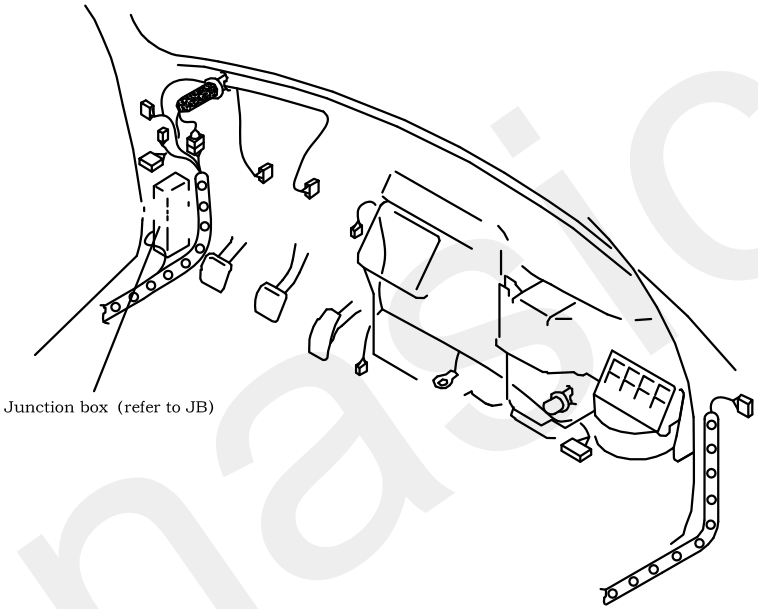

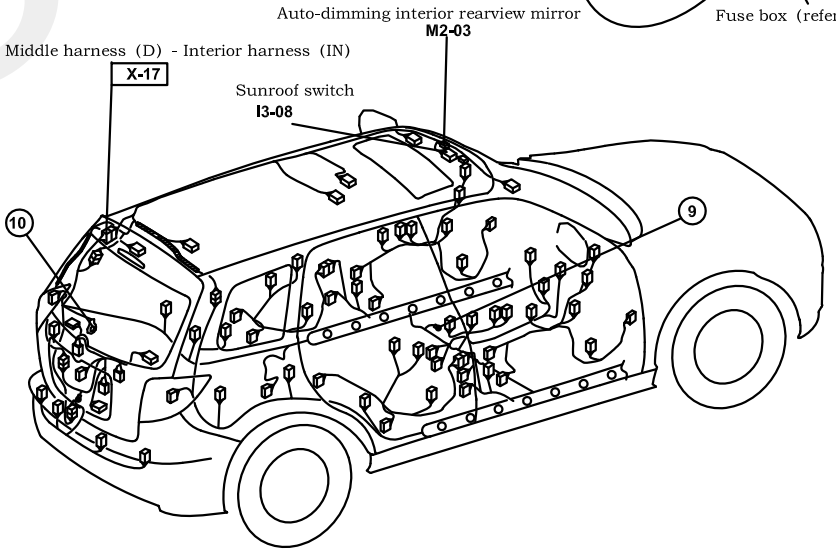

Battery
FB-02
MAIN 125A
R(E)
A
ABS2 40A
ABS1 20A
FB-05
H
I
M
W/B(F) W/B(F)
W/B(F) Y(F)
W/B(F)
O1-01
1 25 32

PEPS
(SECTION N-1c)
357
W(I)
X-06
with PEPS
JB-03 PEPS_ABS 7.5A JB-03
W(D)
O1-09
O1-09
W/B(D)
X-02
M 14 L
W(D) W(D)
W/B(F)

Ignition switch(IG1)
(SECTION Z-1b)
IG1 relay
(SECTION Z-2b)
383
JB-03 ENGINE 10A JB-05
D 14 H
W/Y(D) W/Y(I)
X-08

Sound system
(SECTION J-1b)
BCM
(SECTION N-2b)
PEPS system
(SECTION N-1c)
Remote door lock control unit
(SECTION K-2d)
87
G(I)
X-01
G(F)
28

ABS control unit

13 38 17 30 26 14 34 22 18 6 33 20 19 31

B(F) B(F)
B(F)
3

R/W(F)
153
DLC
(SECTION U)

R/G(F)
132
Brake switch
(SECTION F-3)

B/G(F) L/O(F)
B/G(F) L/O(F)
H1 L1
(SECTION U-2)
Communication wire (CAN)

L/W(F) L/P(F)
O1-02
A B
+ −
FL

P/B(F) P(F)
X-07
P/B(EM) P(EM)
O1-03
A B
+ −
FR

W/L(F) W/G(F)
W/L(D) W/G(D)
O1-04
A B
+ −
RL

BR(F) BR/B(F)
X-02
BR(D) BR/B(D)
O1-05
A B
+ −
RR

ABS wheel speed sensor

O1-01 ABS control unit (F)

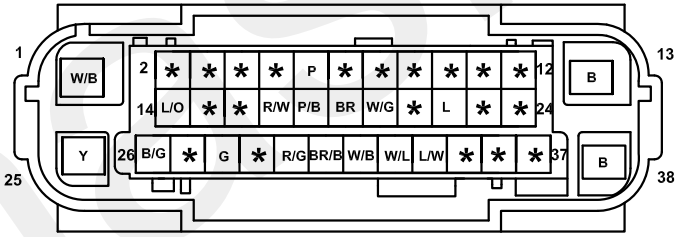

O1-02
ABS wheel speed sensor FL (EM)

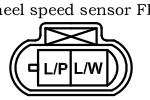

O1-03
ABS wheel speed sensor FR (EM)

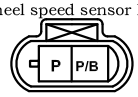

O1-04
ABS wheel speed sensor RL (D)

O1-05
ABS wheel speed sensor RR (D)

O1-09 Diode (D)

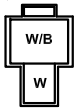

Harness mark: (F) (E) (D) (R)

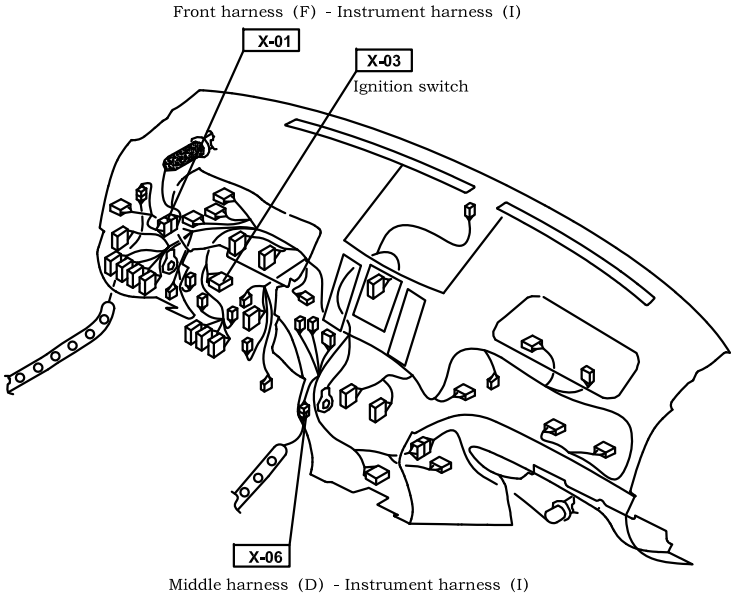

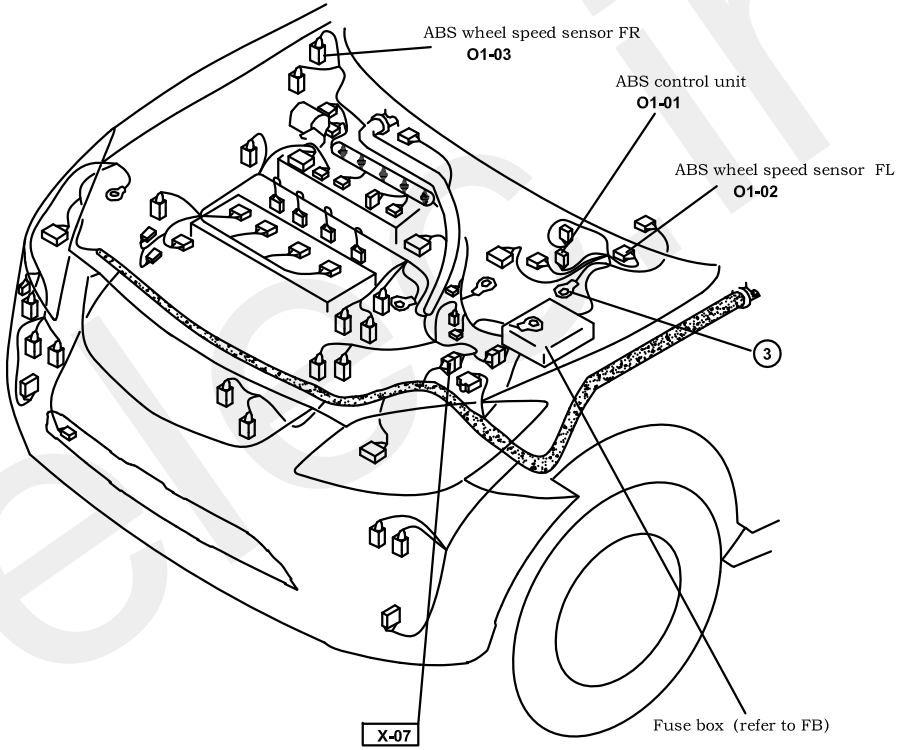

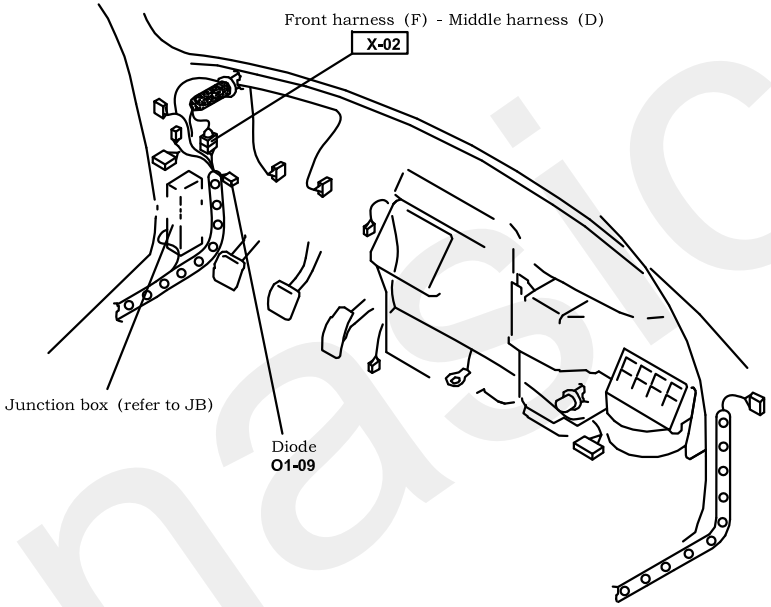

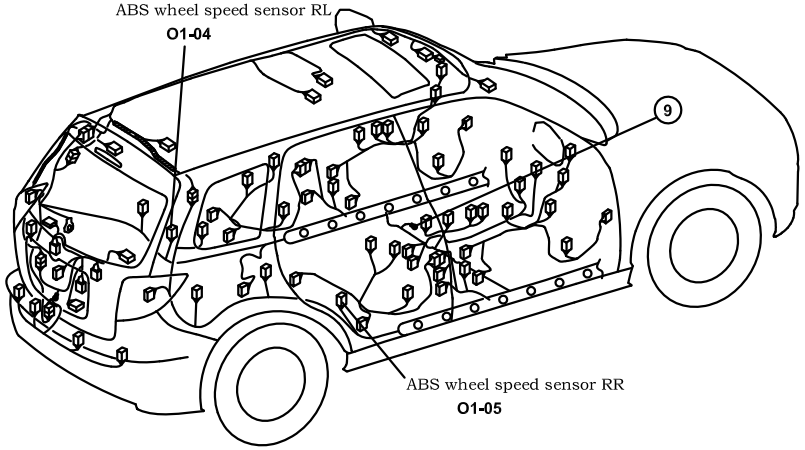

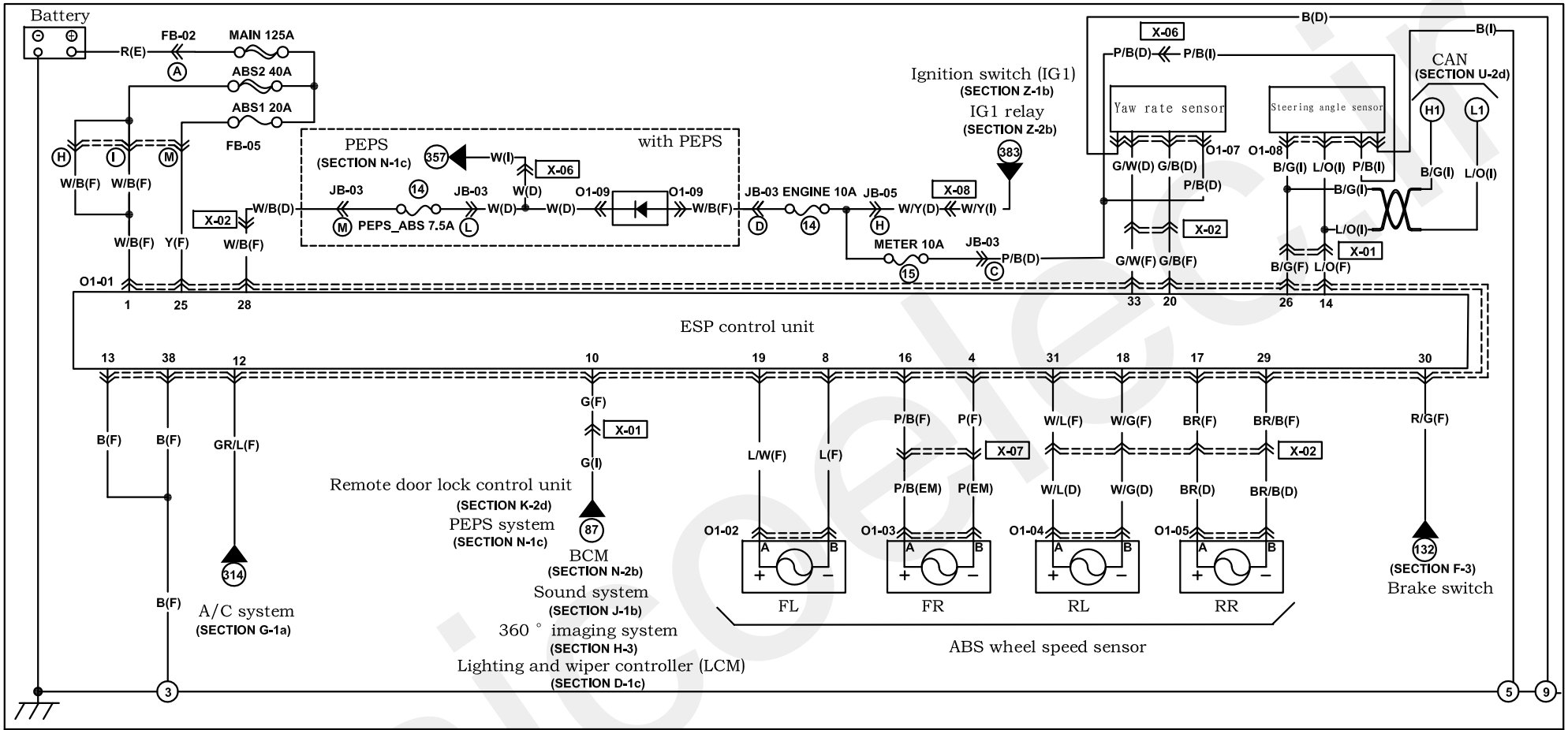

O1-06 ESP control unit (F)

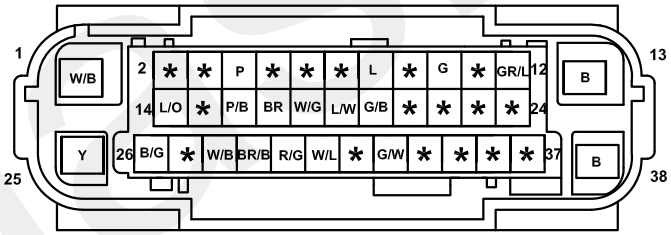

O1-02 ABS wheel speed sensor FL (EM)

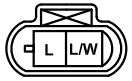

O1-03 ABS wheel speed sensor FR (EM)

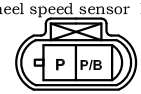

O1-07 Yaw rate sensor (D)

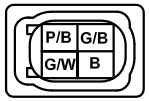

O1-04 ABS wheel speed sensor RL (D)

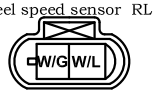

O1-05 ABS wheel speed sensor RR (D)

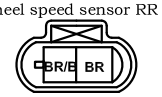

O1-08 Steering angle sensor (I)

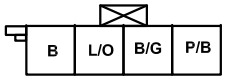

O1-09 Diode (D)

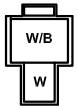

Harness mark: (F) (E) (D) (R)

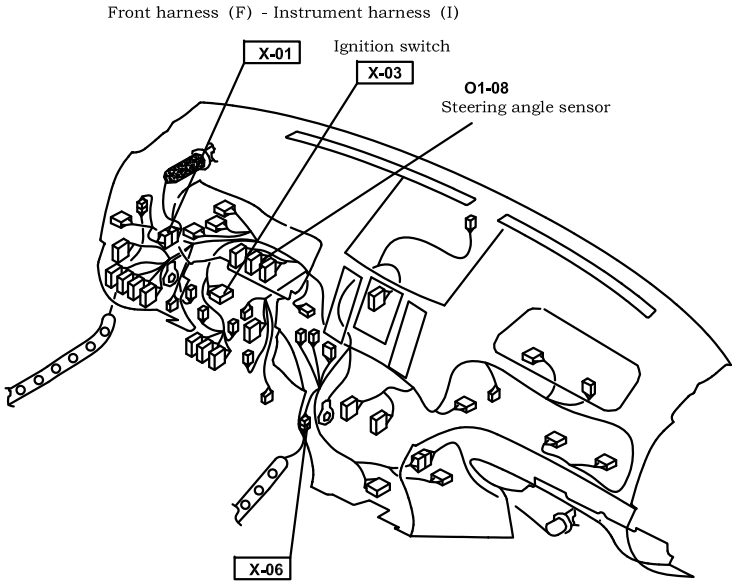

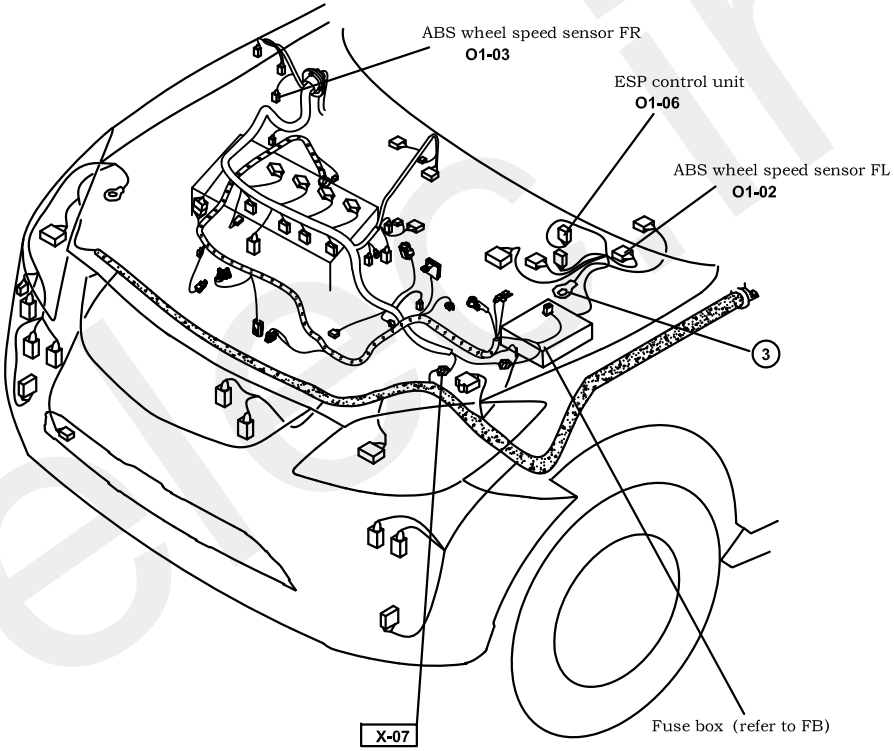

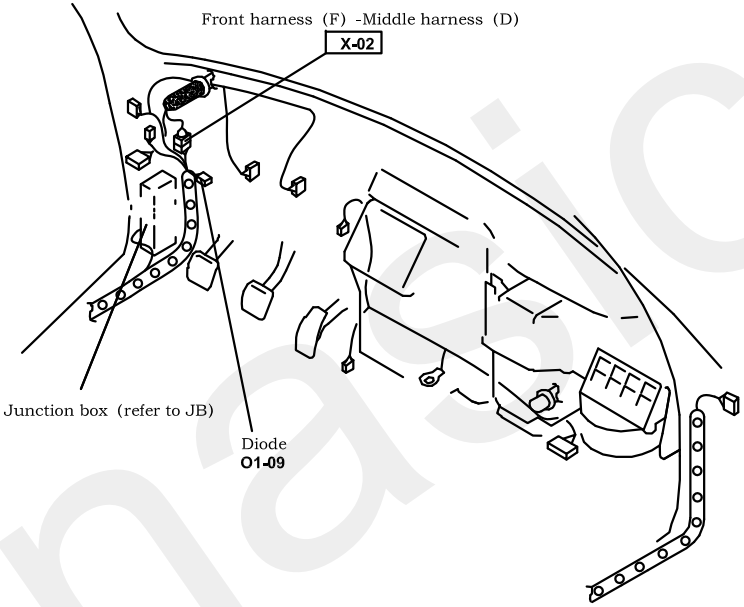

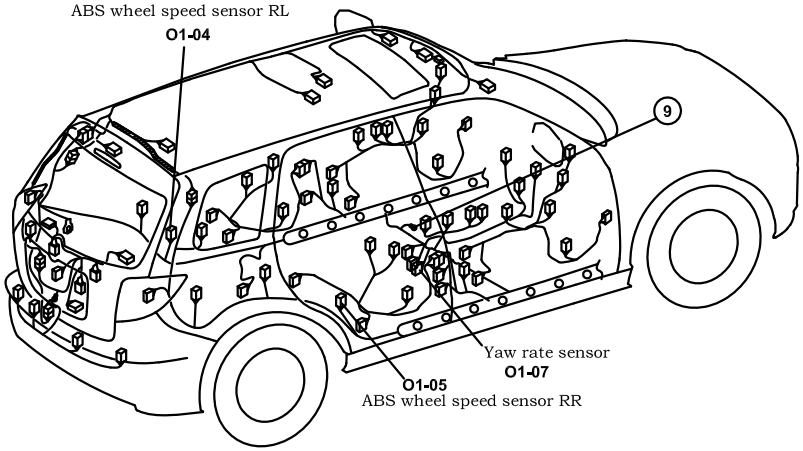

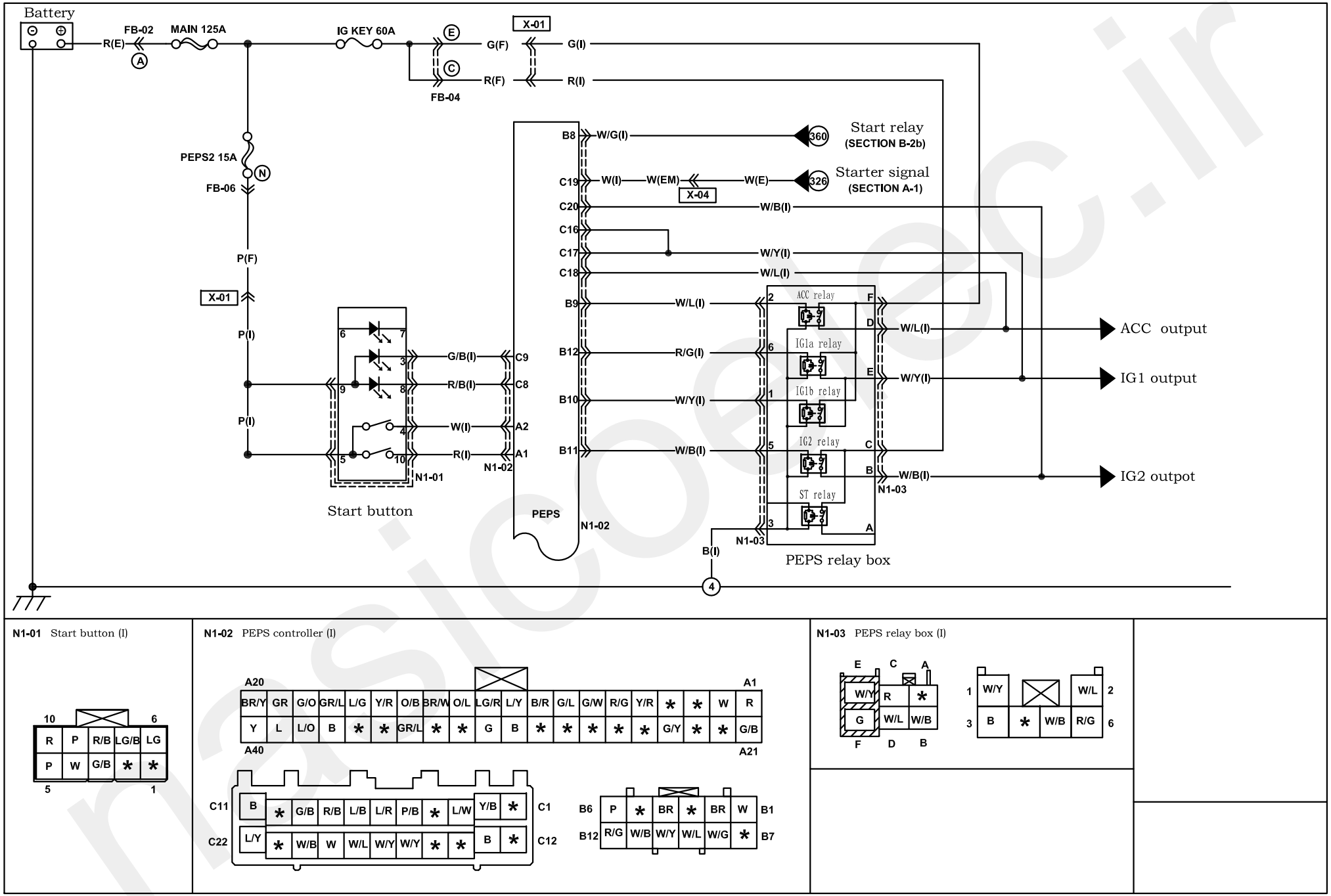

N1-01 Start button (I)

R	P	R/B	LG/B	LG
P	W	G/B	*	*

10 6 / 5 1

N1-02 PEPS controller (I)

A20 A1

BR/Y	GR	G/O	GR/L	L/G	Y/R	O/B	BR/W	O/L	LG/R	L/Y	B/R	G/L	G/W	R/G	Y/R	*	*	W	R
Y	L	L/O	B	*	*	GR/L	*	*	G	B	*	*	*	*	*	G/Y	*	*	G/B

A40 A21

C11	B	*	G/B	R/B	L/B	L/R	P/B	*	L/W	Y/B	*	C1
C22	L/Y	*	W/B	W	W/L	W/Y	W/Y	*	*	B	*	C12

B6	P	*	BR	*	BR	W	B1
B12	R/G	W/B	W/Y	W/L	W/G	*	B7

N1-03 PEPS relay box (I)

E C A

W/Y	R	*
G	W/L	W/B

F D B

1	W/Y		W/L	2
3	B	*	W/B	R/G	6

Harness mark: (F) (E) (D) (R)

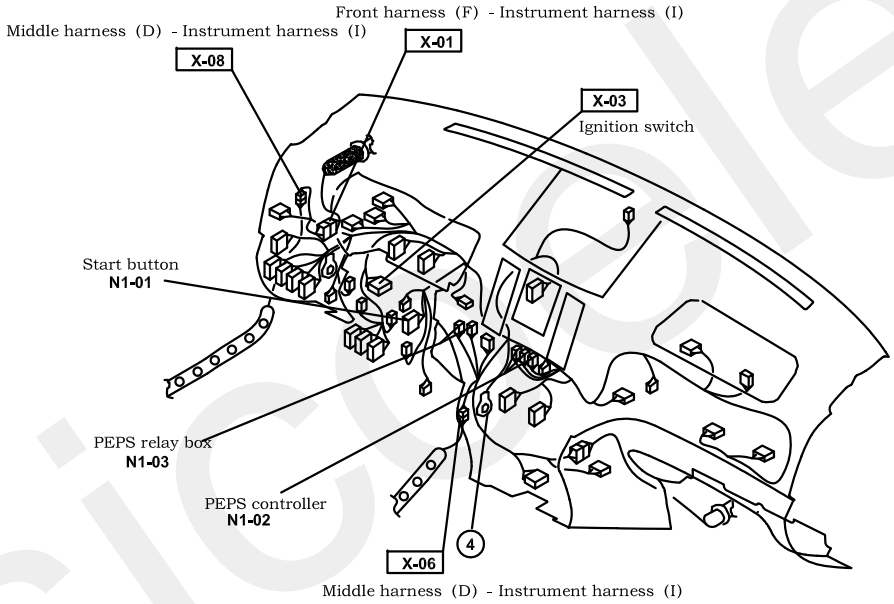

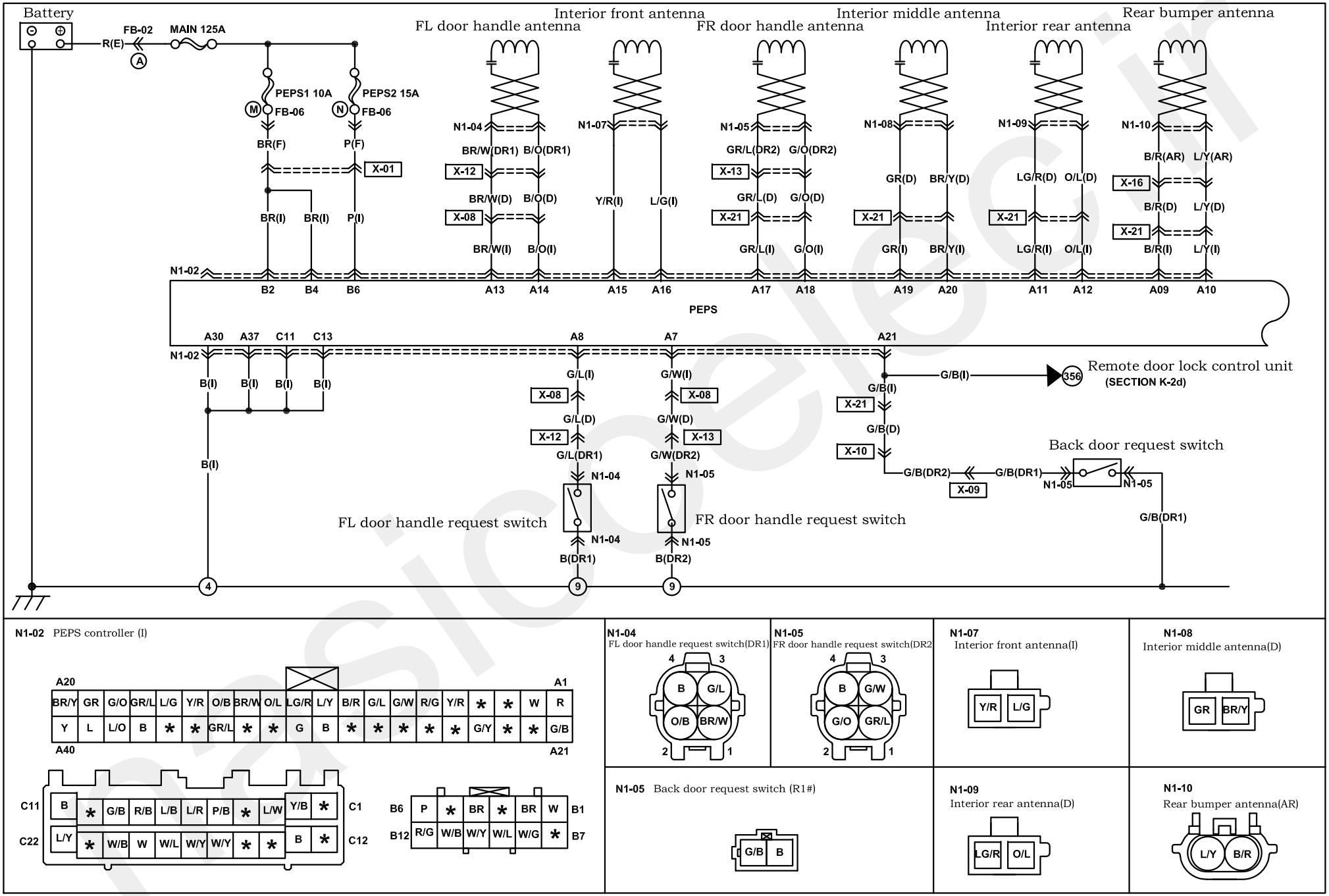

N1-02 PEPS controller (I)

N1-04
FL door handle request switch(DR1)

N1-05
FR door handle request switch(DR2)

N1-07
Interior front antenna(I)

N1-08
Interior middle antenna(D)

N1-05 Back door request switch (R1#)

N1-09
Interior rear antenna(D)

N1-10
Rear bumper antenna(AR)

Harness mark: (F) (E) (D) (R)

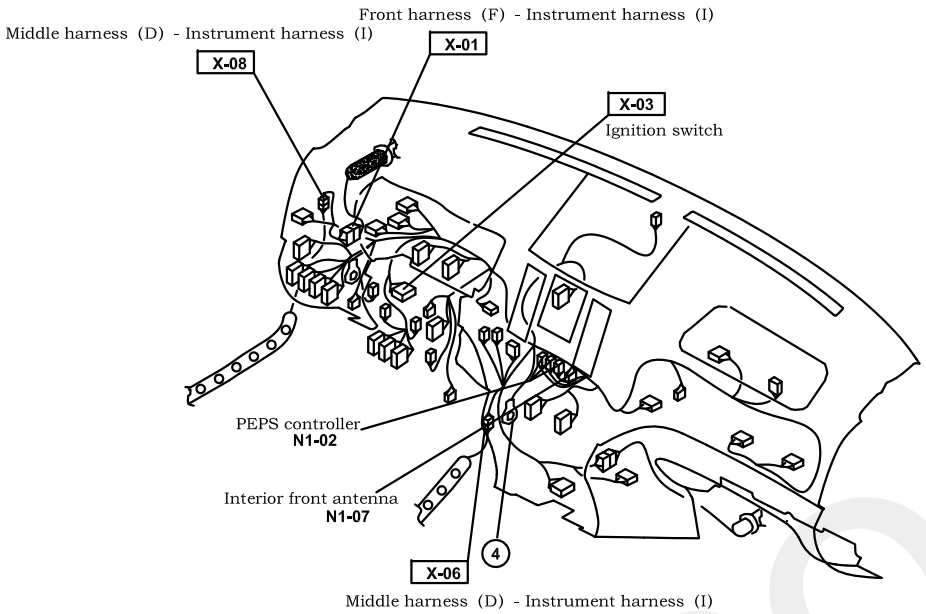

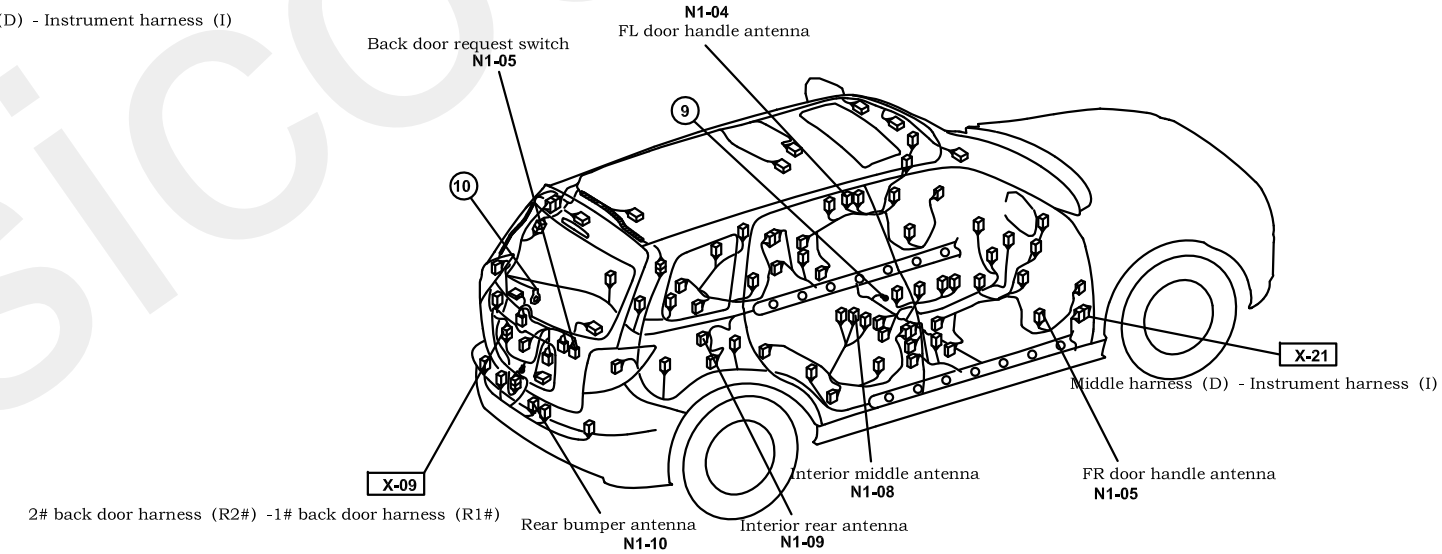

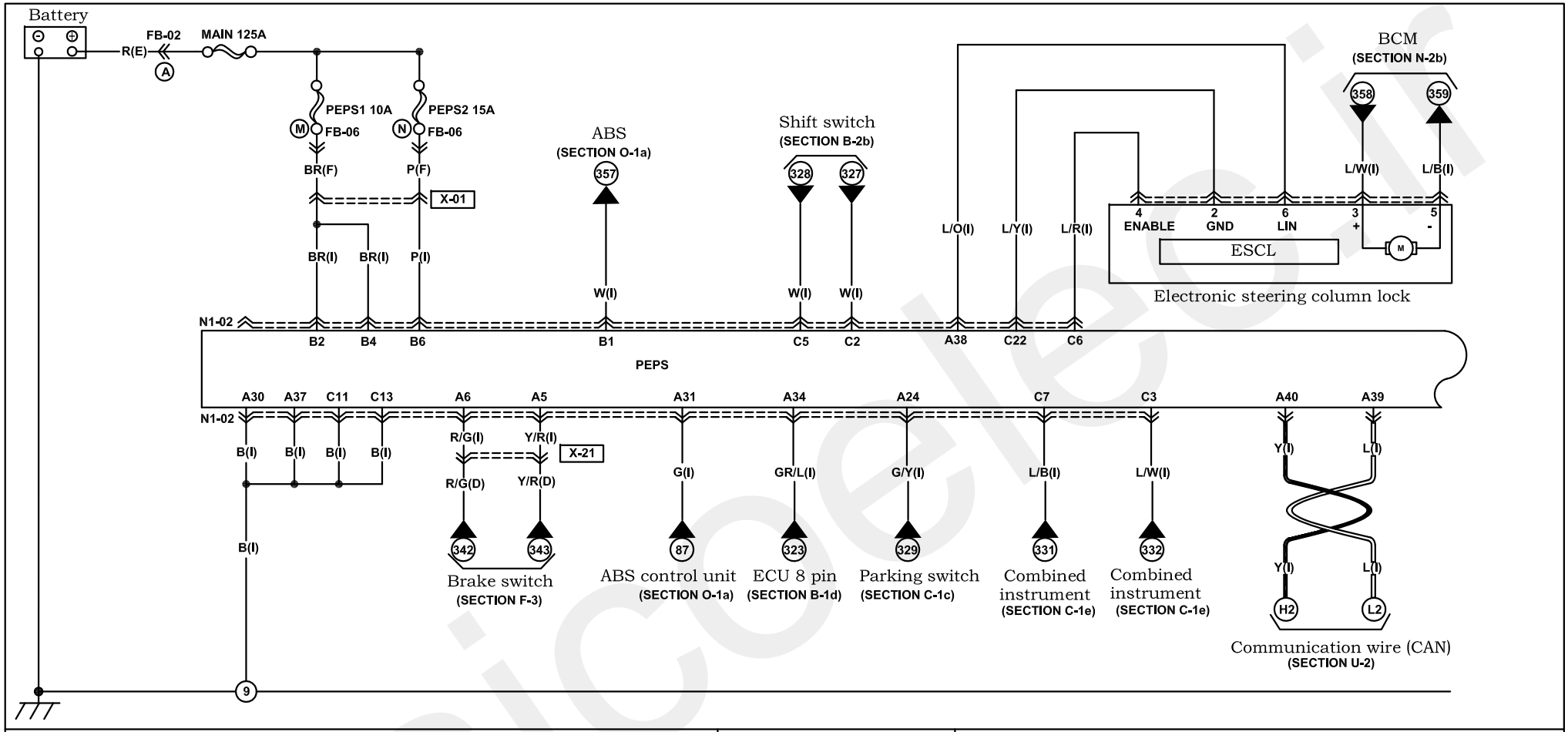

N1-02 PEPS controller (I)

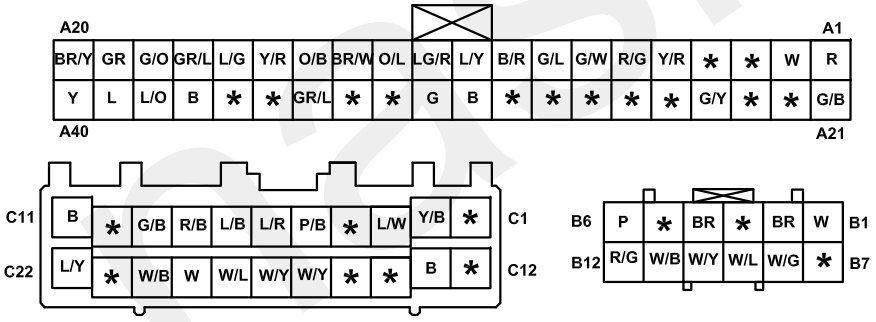

N1-11

Electronic steering column lock (I)

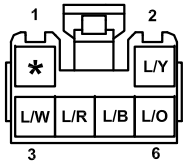

Harness mark: (F) (E) (D) (R)

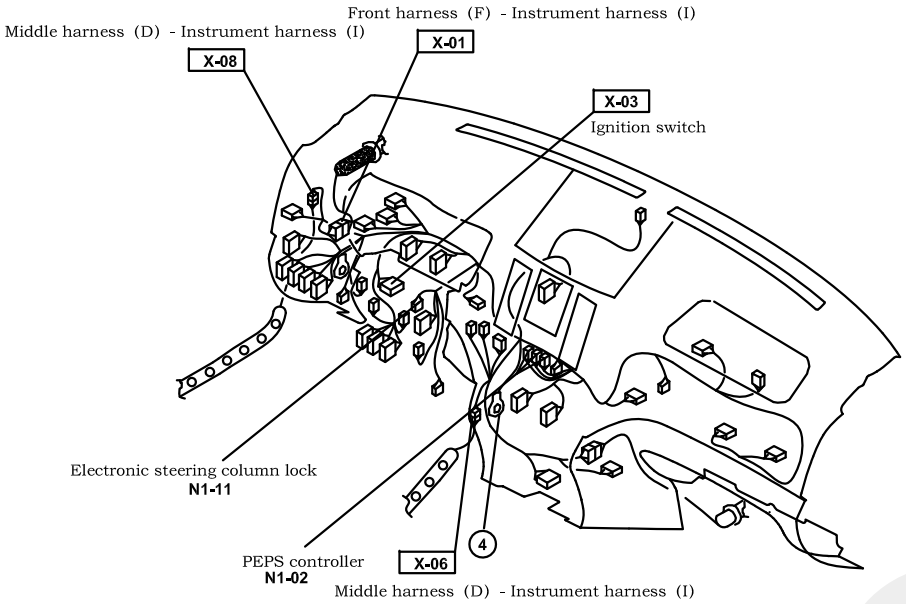

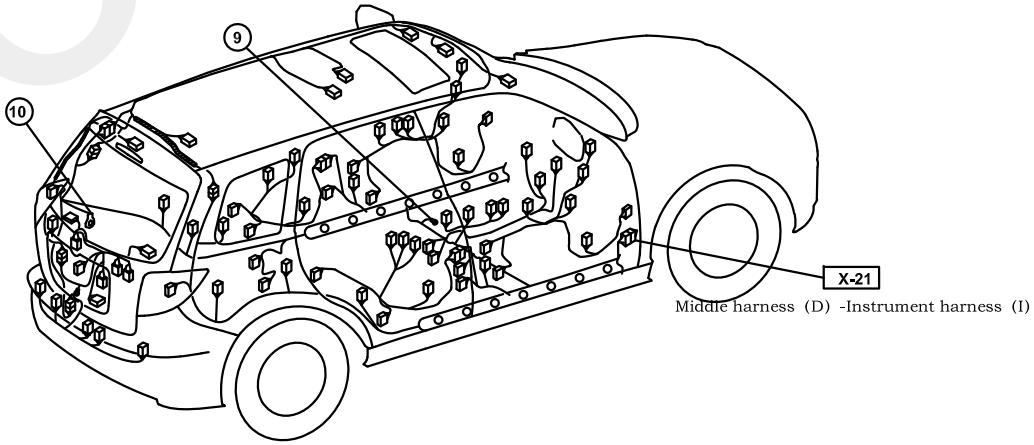

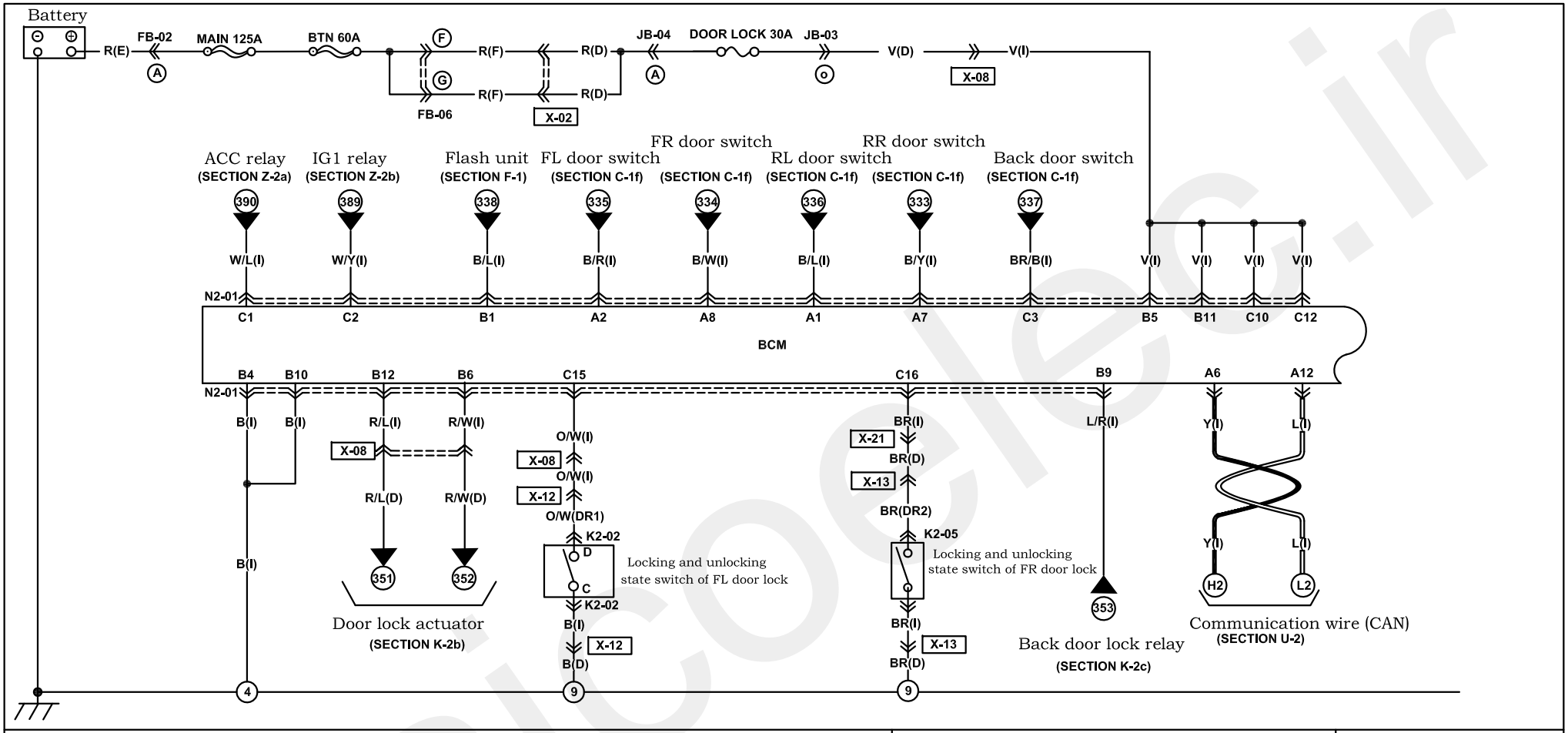

N2-01 Body control system (BCM) (I)

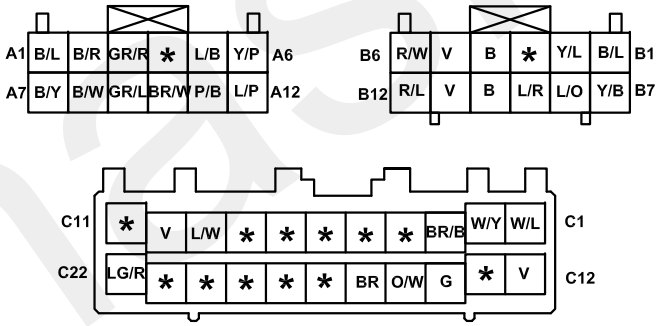

K2-02 FL door lock actuator (DR1)

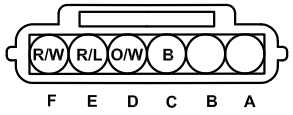

K2-05 FR door lock actuator (DR2)

$ with **PEPS**

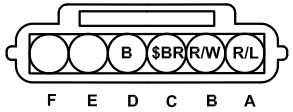

Harness mark: (F) (E) (D) (R)

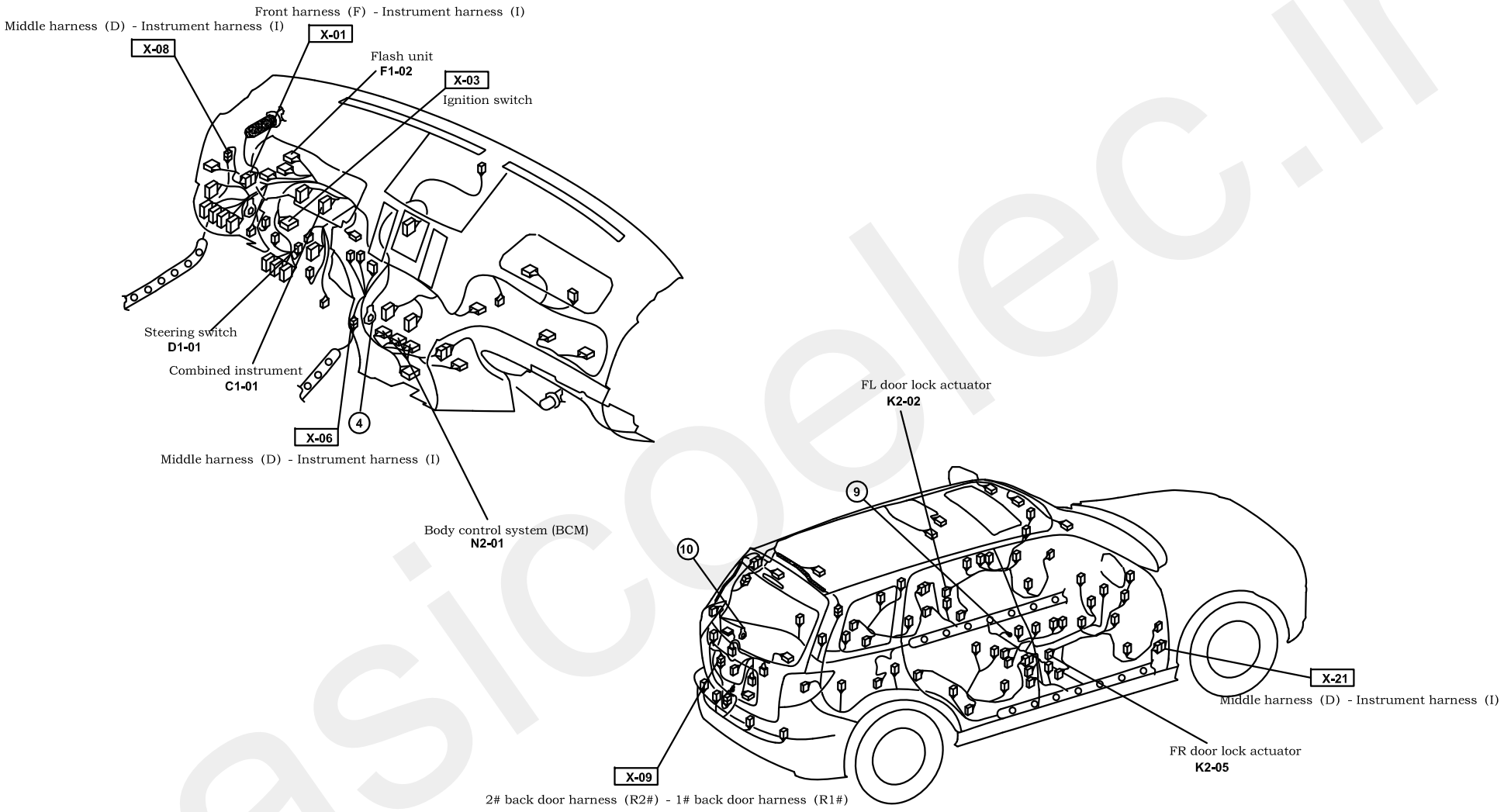

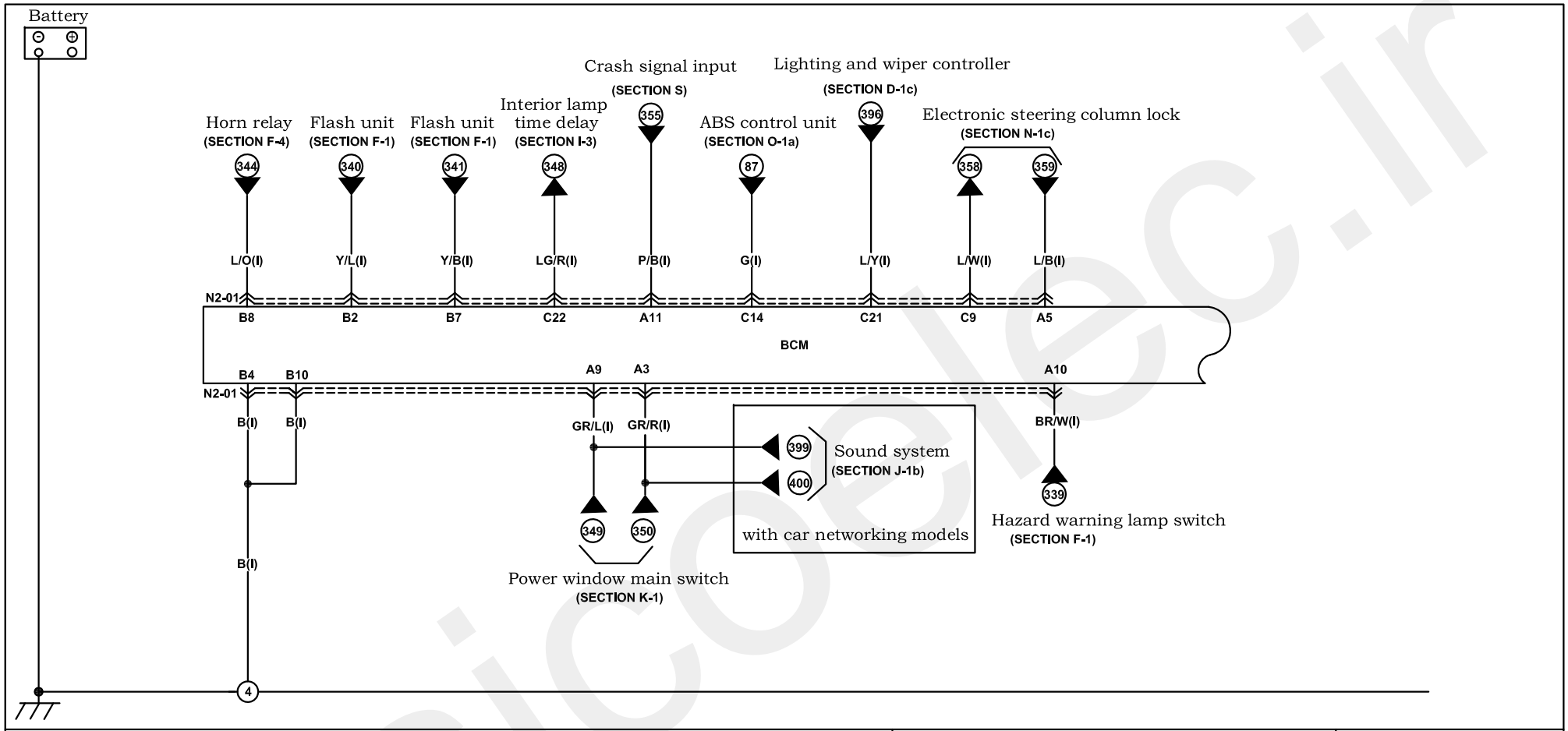

N2-01 Body control system (BCM)(I)

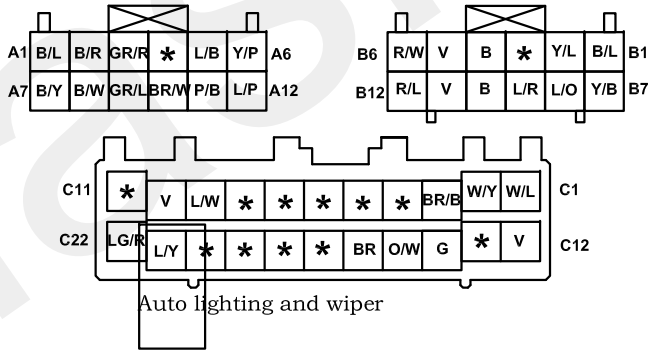

K1-01 Power window main switch (DR1)

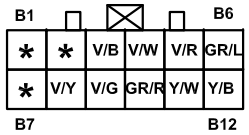

Harness mark: (F) (E) (D) (R)

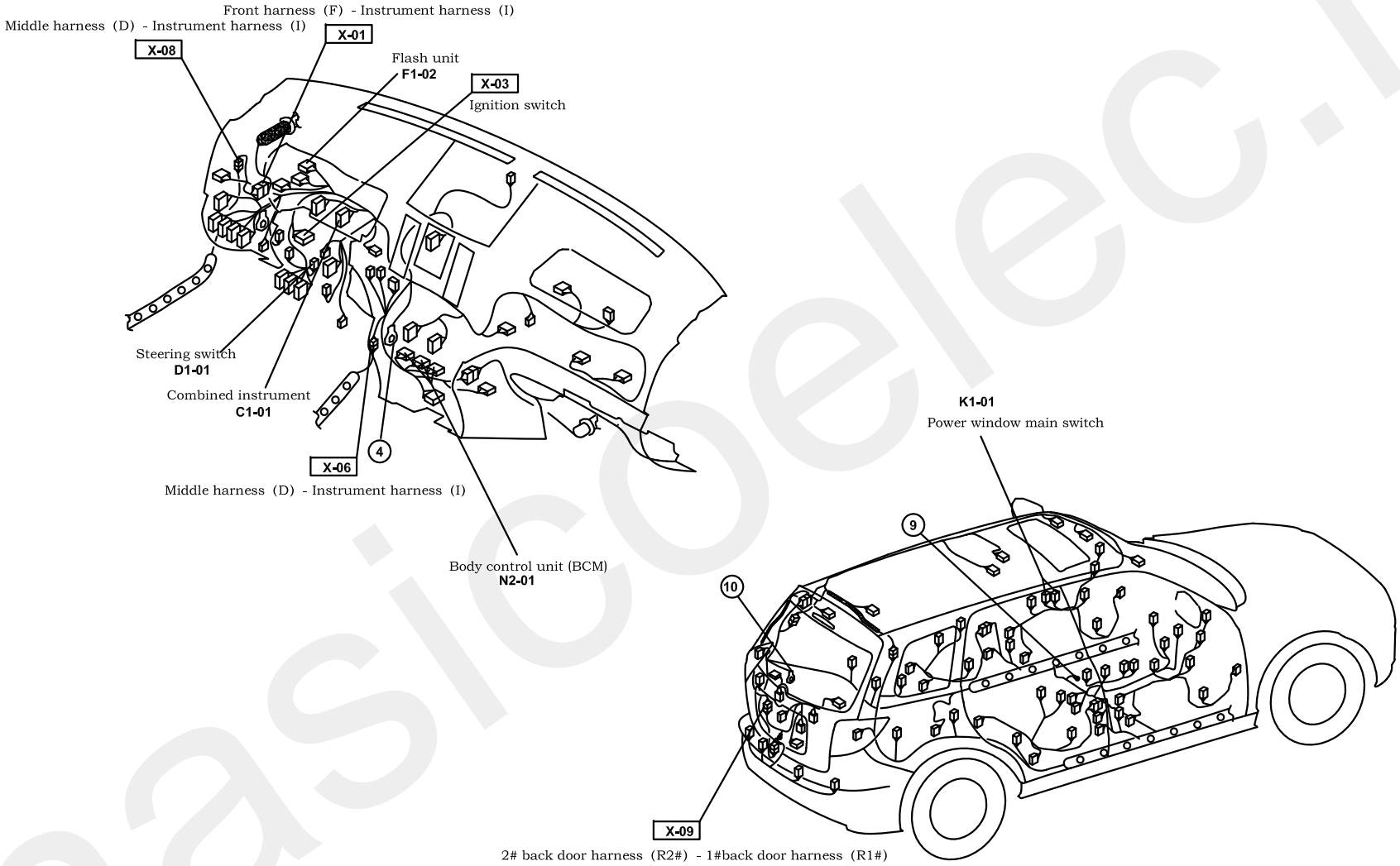

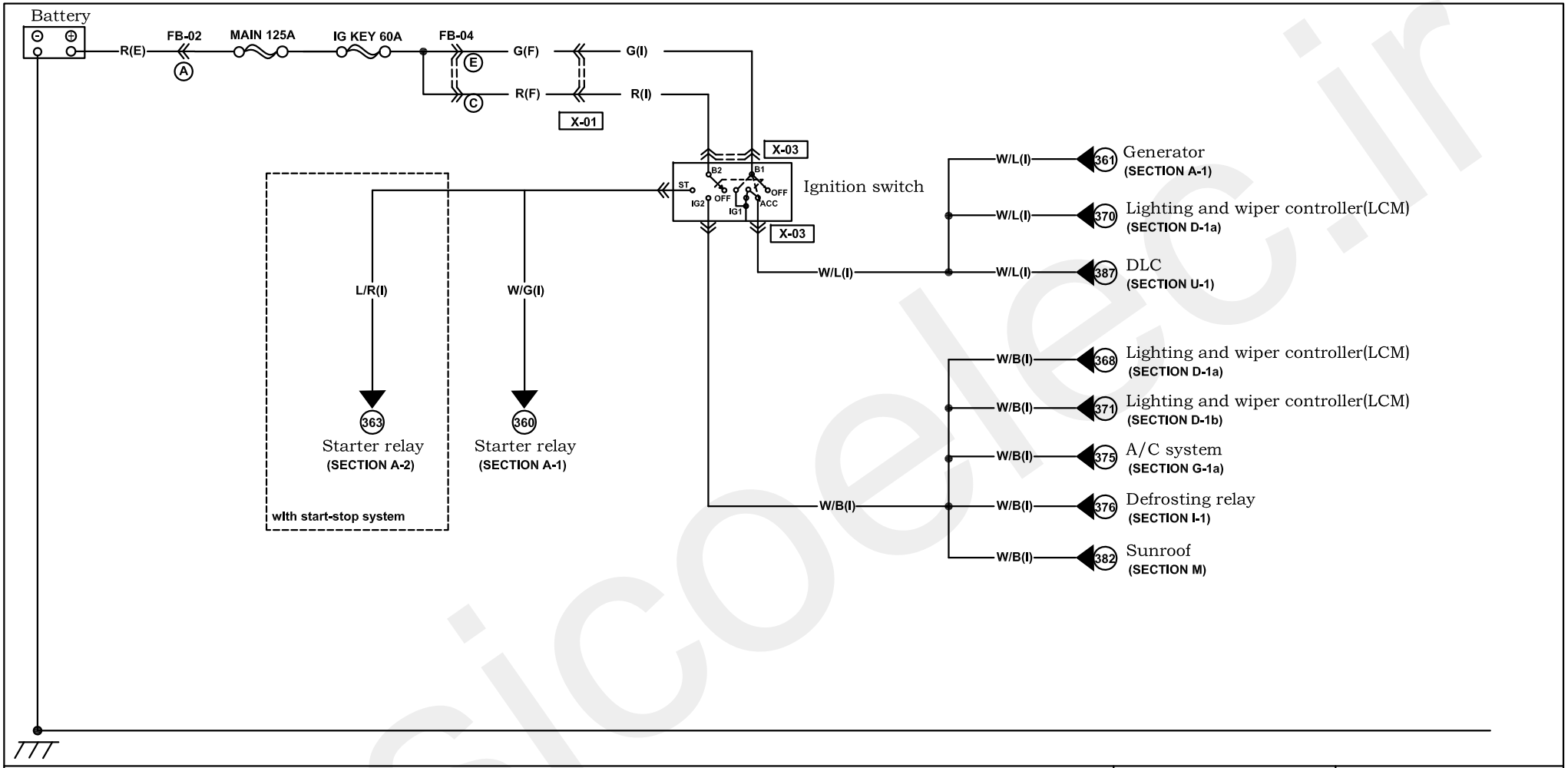

Harness mark: (F) (E) (D) (R)

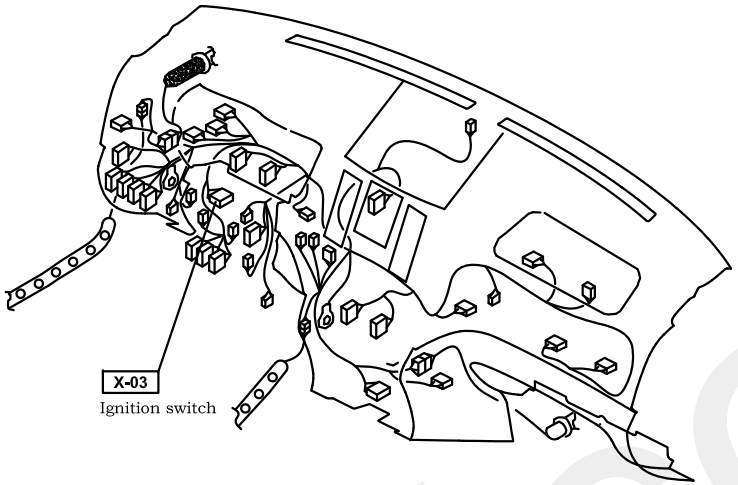

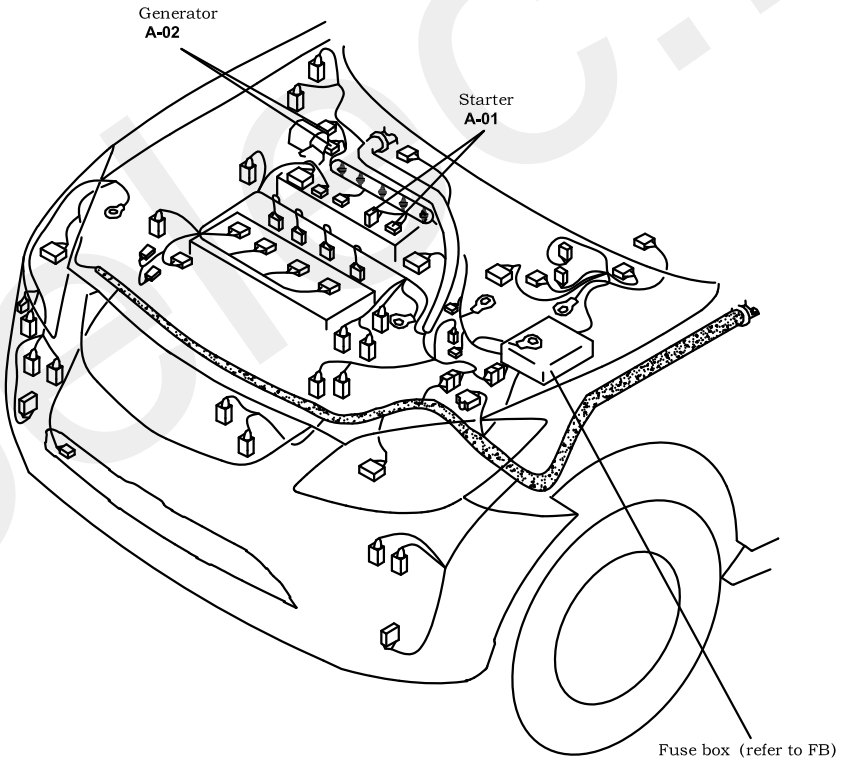

Power supply system (without smart key)

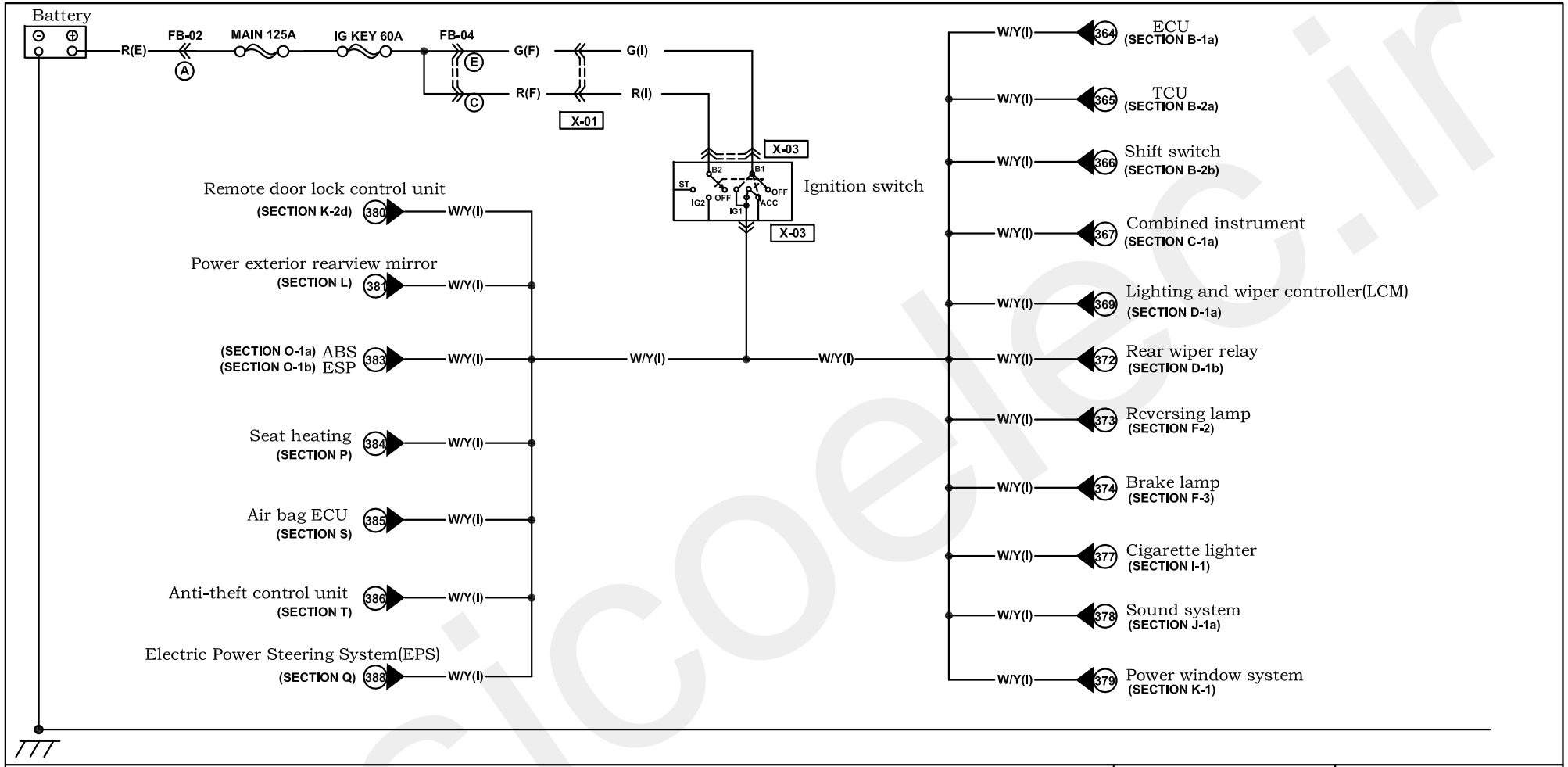

Harness mark: (F) (E) (D) (R)

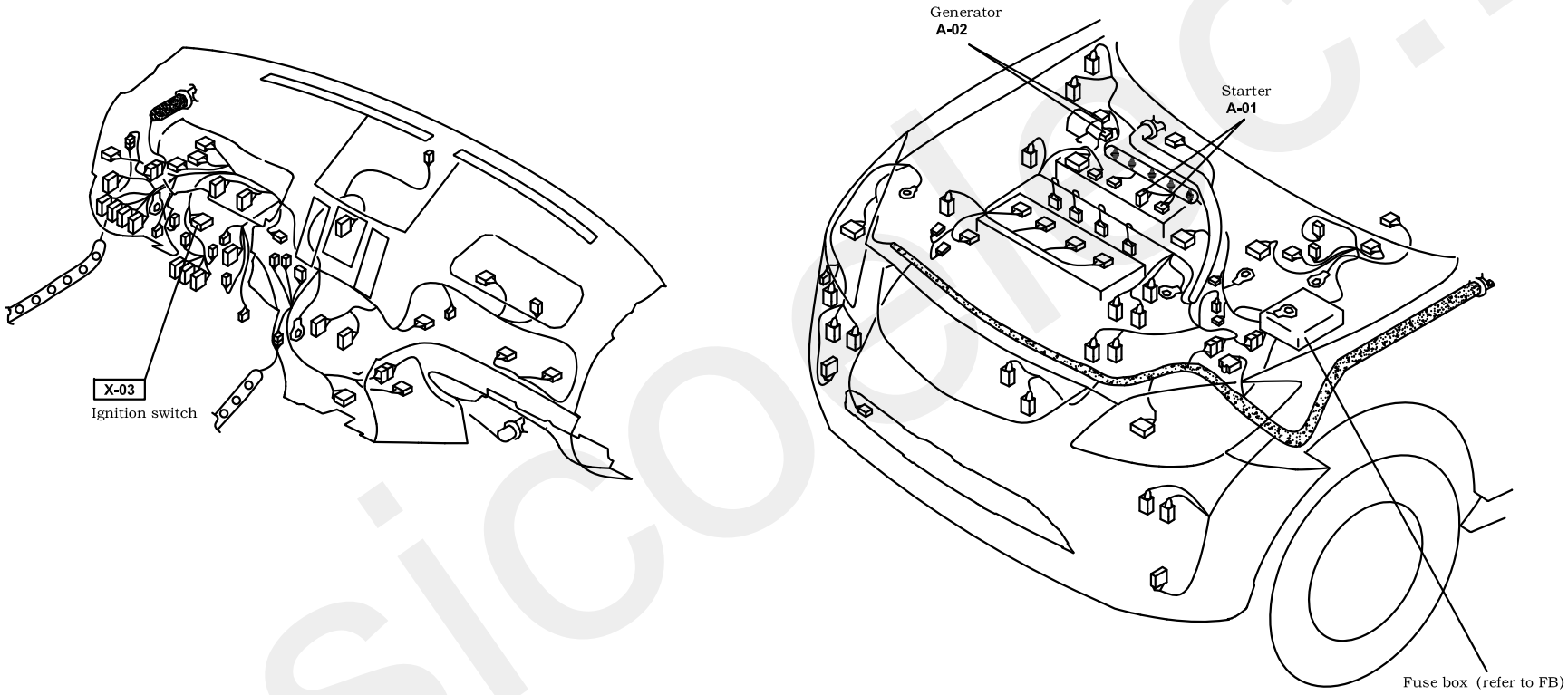

Power supply system (with smart key)

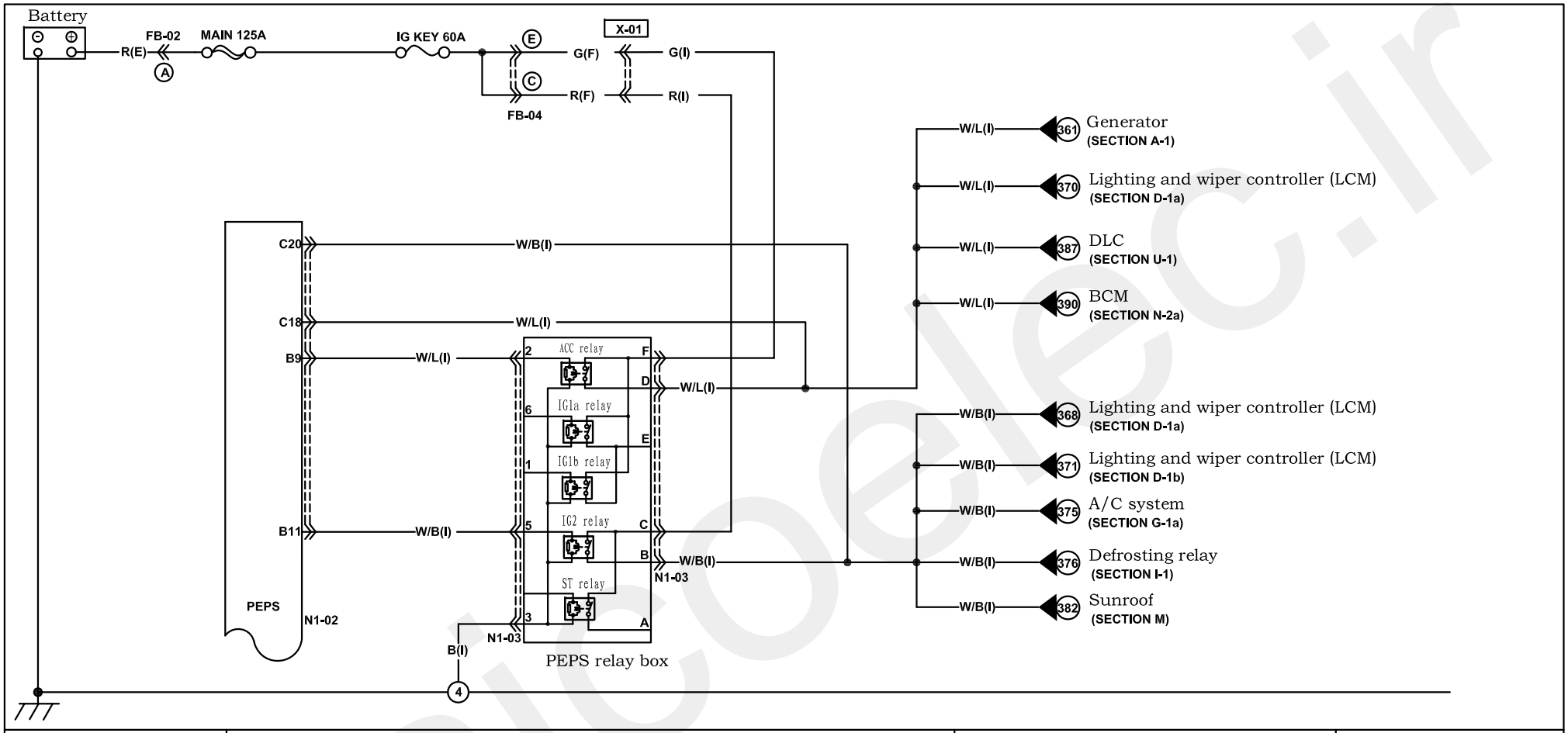

N1-02 PEPS controller (I)

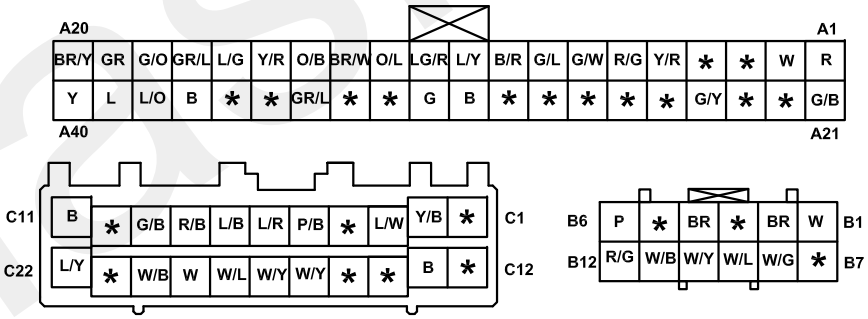

N1-03 PEPS relay box (I)

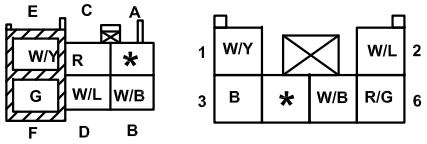

Harness mark: (F) (E) (D) (R)

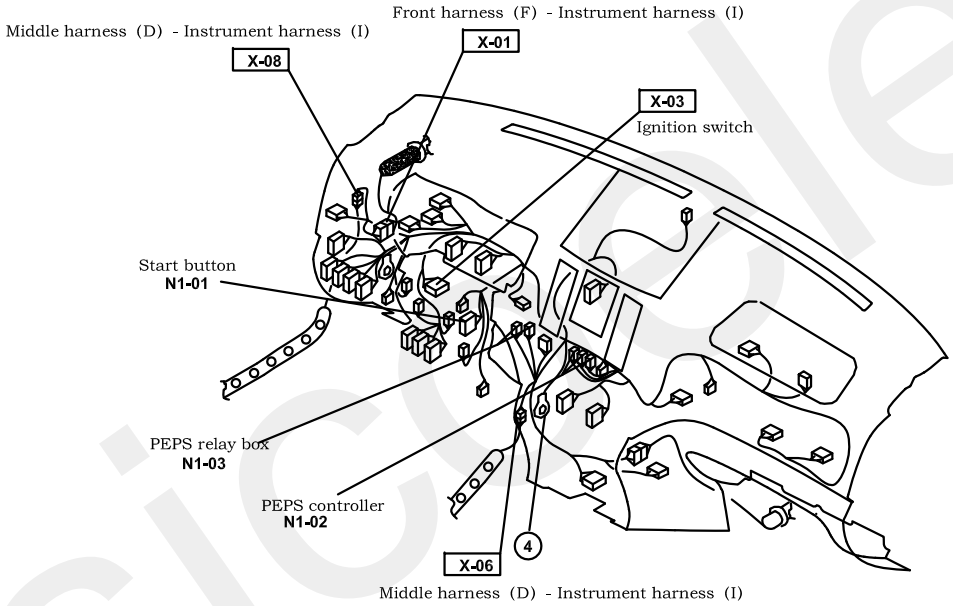

Power supply system (with smart key)

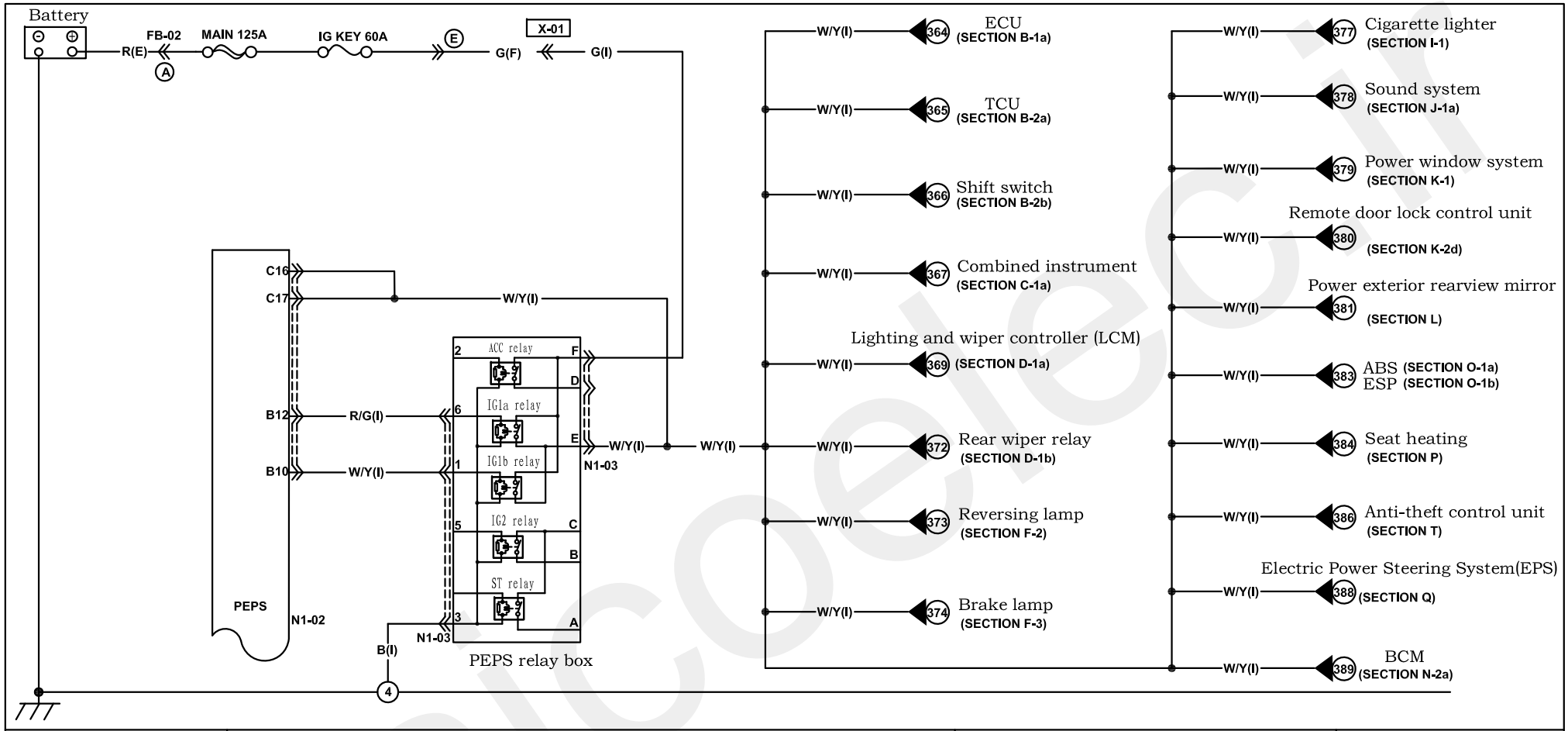

N1-02 PEPS controller (I)

A20																			A1
BR/Y	GR	G/O	GR/L	L/G	Y/R	O/B	BR/W	O/L	LG/R	L/Y	B/R	G/L	G/W	R/G	Y/R	*	*	W	R
Y	L	L/O	B	*	*	GR/L	*	*	G	B	*	*	*	*	*	G/Y	*	*	G/B
A40																			A21

C11	B	*	G/B	R/B	L/B	L/R	P/B	*	L/W	Y/B	*	C1
C22	L/Y	*	W/B	W	W/L	W/Y	W/Y	*	*	B	*	C12

B6	P	*	BR	*	BR	W	B1
B12	R/G	W/B	W/Y	W/L	W/G	*	B7

N1-03 PEPS relay box (I)

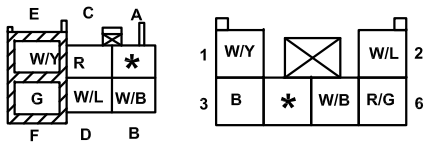

Harness mark: (F) (E) (D) (R)

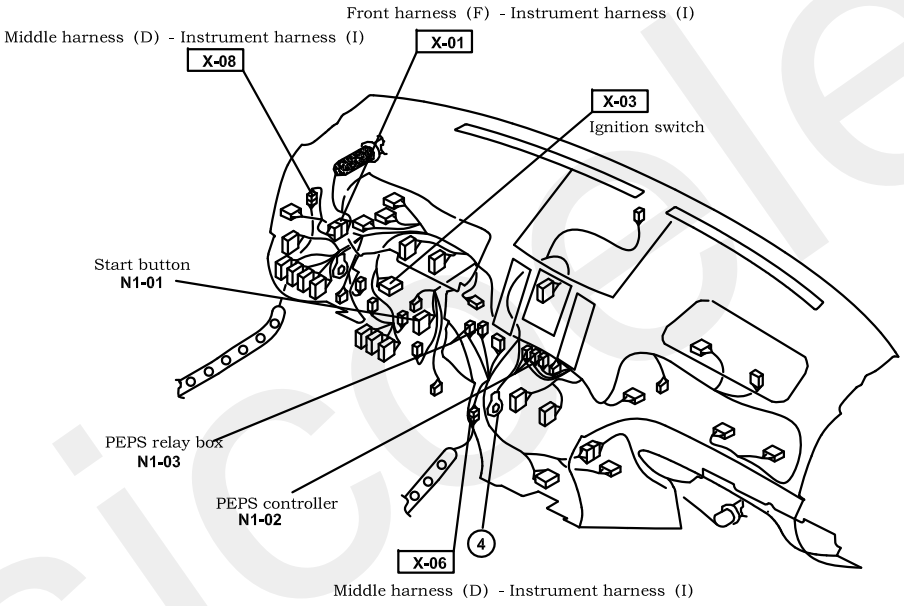

Power seat and seat heating

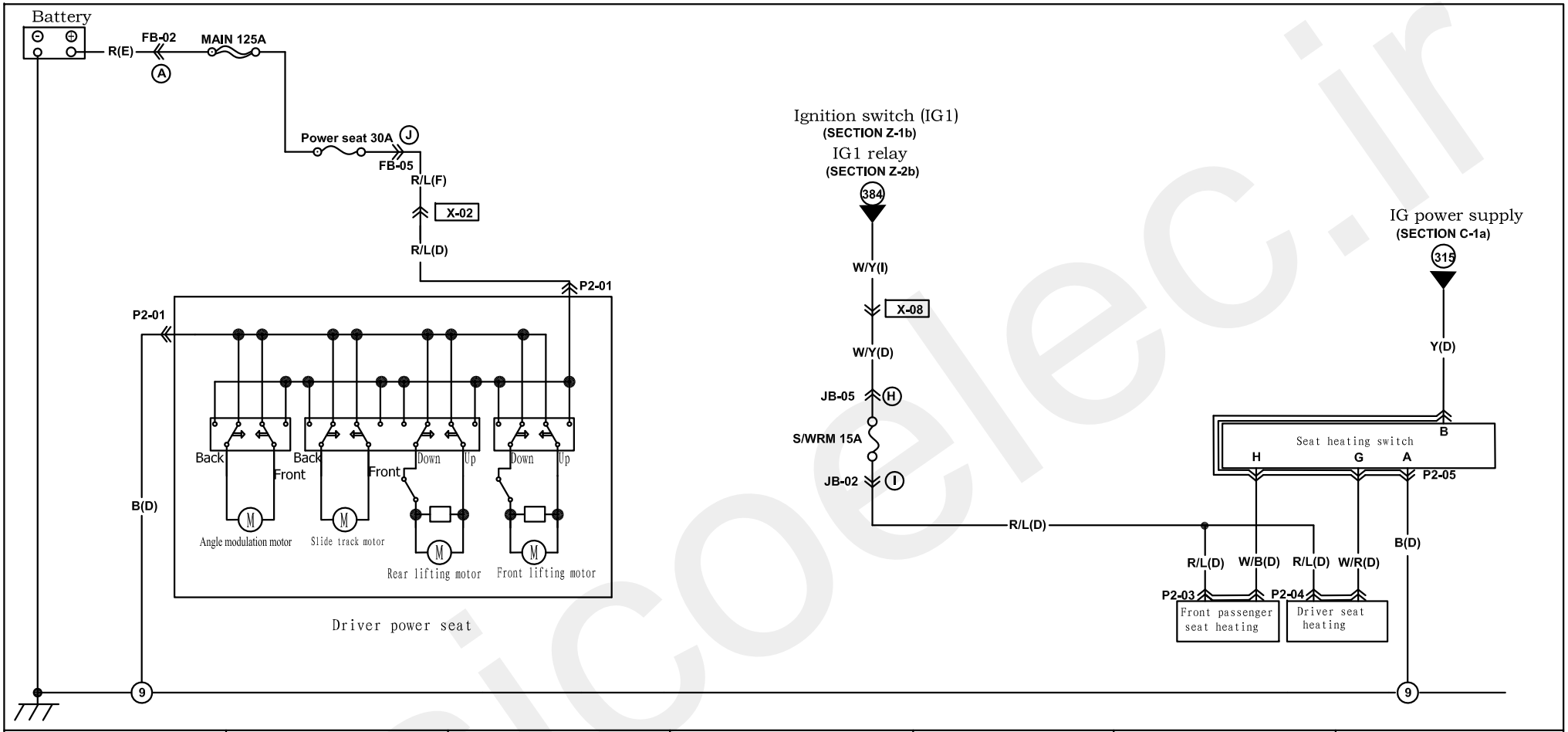

P2-01 Driver power seat (D)

P2-03 Driver seat heating (D)

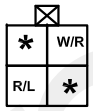

P2-04 Front passenger seat heating (D)

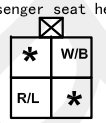

P2-05 Seat heating switch (D)

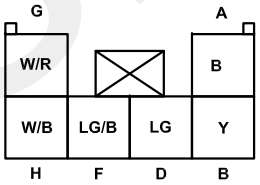

Harness mark: (F) (E) (D) (R)

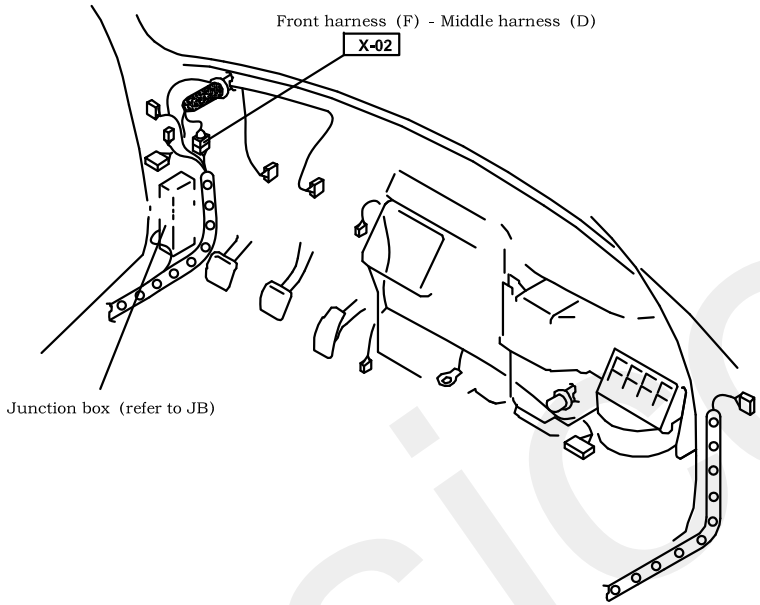

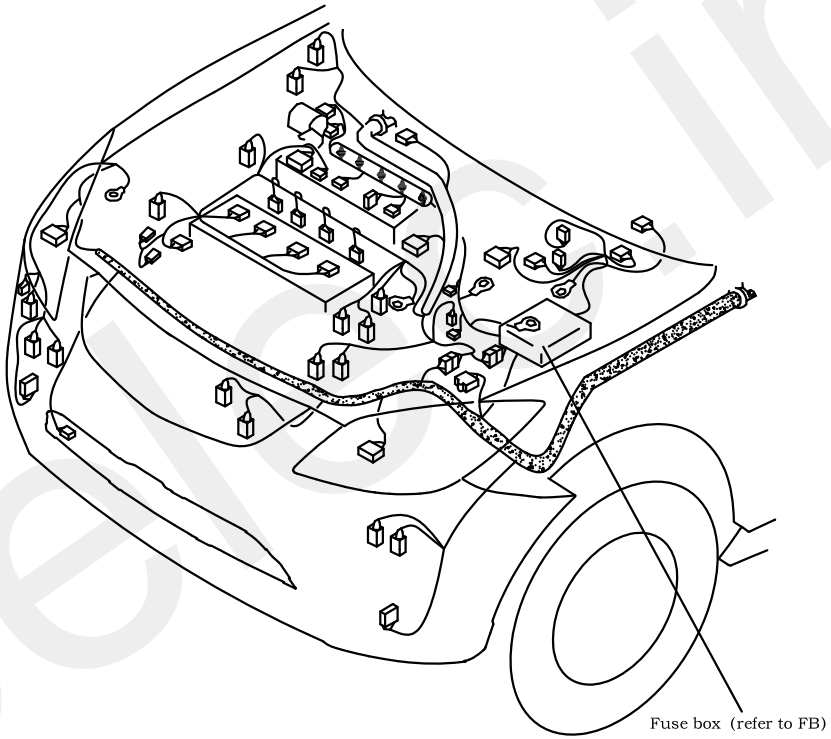

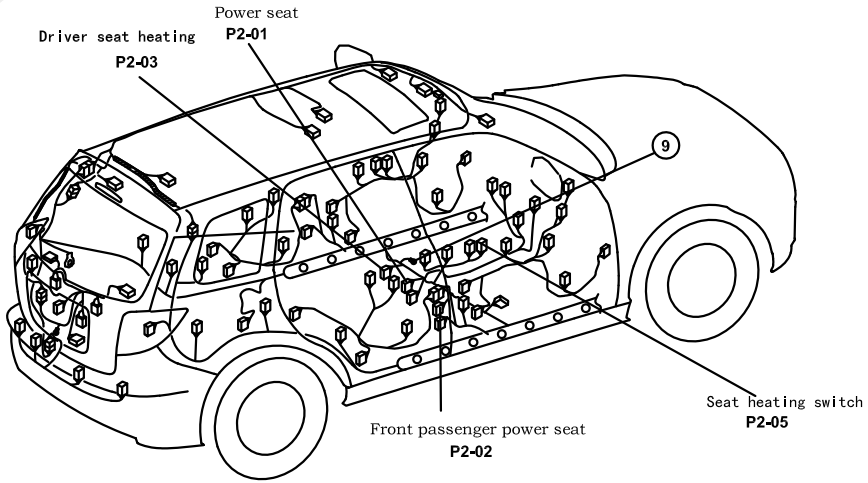

Battery

EPS 80A

A1-03

R(F)

B(F)

B(I)

R(I)

X-22

Q-01

A

B

Q-02

A

W/B(I)

X-06

W/B(D)

JB-03

F

ENGINE 10A

JB-05

H

W/Y(D)

W/Y(I)

X-08

Ignition switch (IG1)

(SECTION Z-1b)

IG1 relay

(SECTION Z-2b)

388

Communication wire (CAN)

(SECTION U-2)

L1

H1

L/O(I)

B/G(I)

C

D

Electric power steering control unit (EPS)

COS+

COS-

SIN+

SIN-

Exciter+

Exciter-

Resolver sensor

TSS

TSM

TSV

TSE

Torque sensor

U

V

W

EPS motor

15

Q-01 EPS power supply (I)

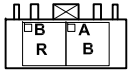

Q-02 EPS controller (I)

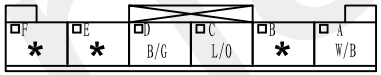

A1-03 Battery B+ (E)

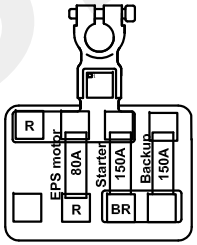

Harness mark: (F) (E) (D) (R)

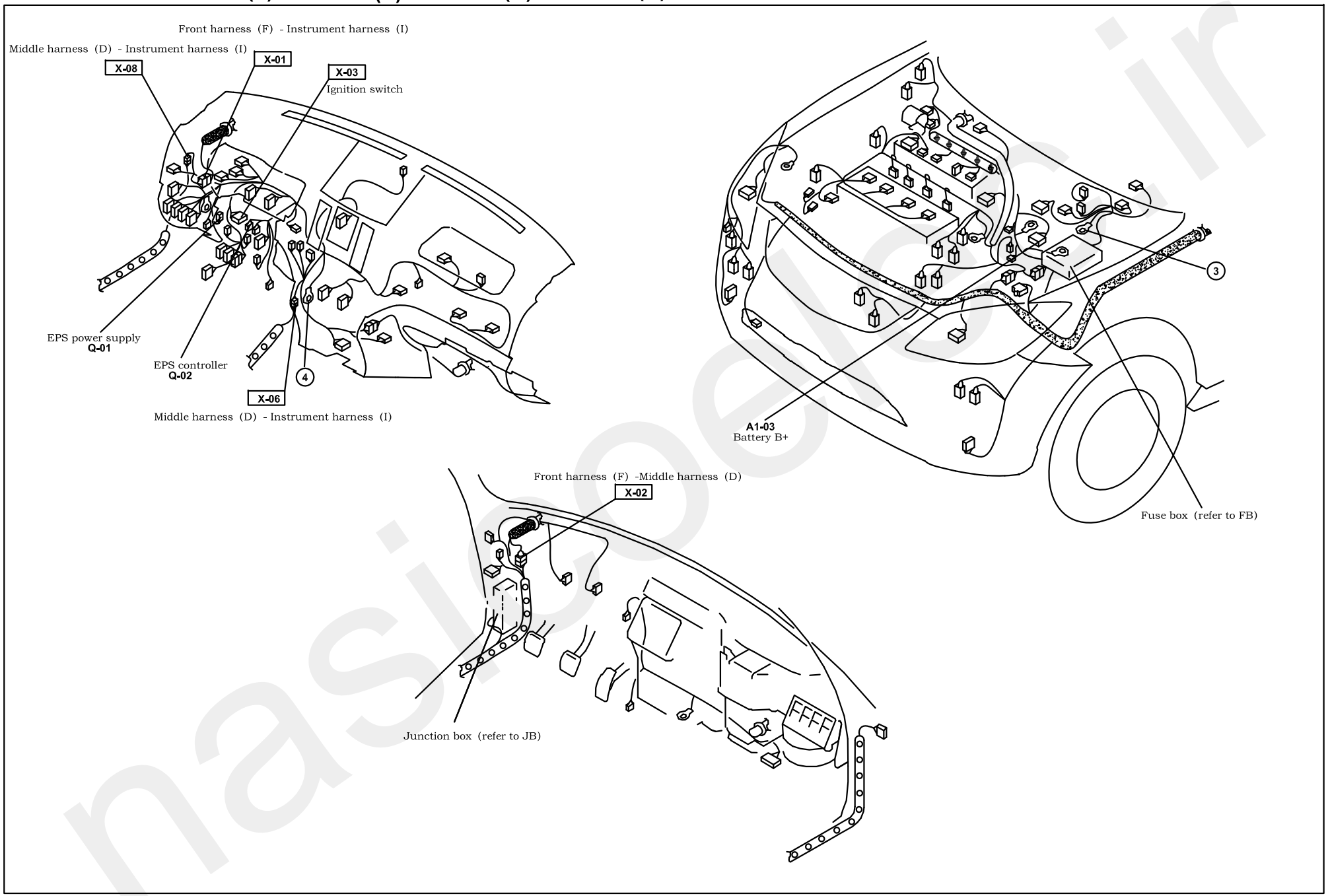

Air bag /Seat belt pretensioner system (1.8T)

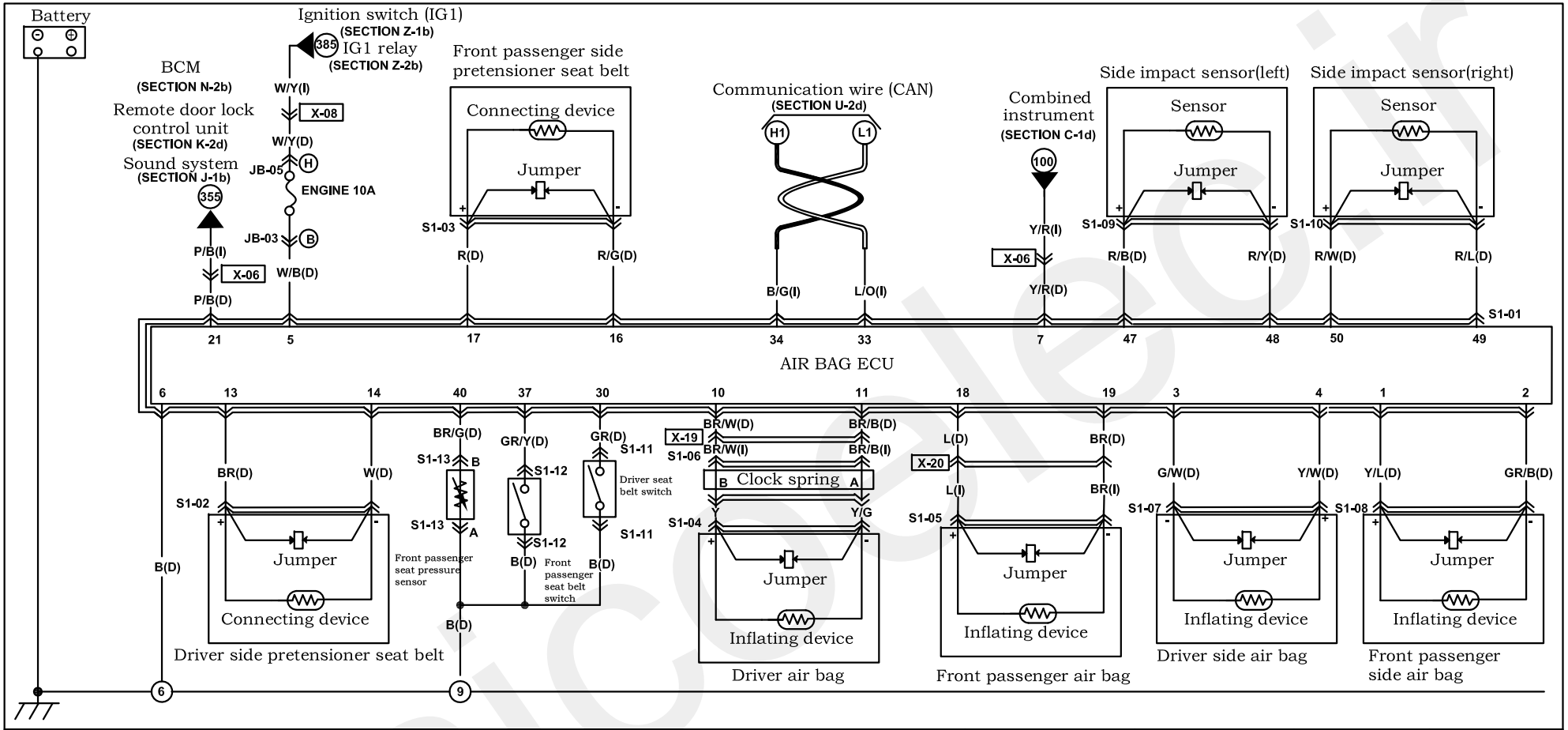

S1-01 Air bag ECU (D)

{ } with side air bag

26																						50
*	*	*	*	GR	*	*	L/O	B/G	*	*	GR/Y	*	*	BR/G	*	*	*	*	*	*	{R/B}	{R/Y}	{R/L}	{R/W}
{Y/L}	{GR/B}	{G/W}	{Y/W}	W/B	B	Y/R	*	*	BR/W	BR/B	*	BR	W	*	R/G	R	L	BR	*	P/B	*	*	*	*
1																						25

S1-02 Driver side pretensioner seat belt(D)

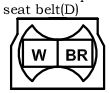

S1-03 Front passenger side pretensioner seat belt(D)

S1-04 Driver air bag(I)

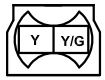

S1-05 Front passenger air bag (I)

S1-07 Driver side air bag (D)

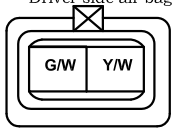

S1-08 Front passenger side air bag(D)

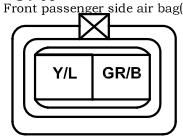

S1-09 Side impact sensor(left)(D)

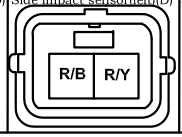

S1-10 Side impact sensor(right)(D)

S1-11 Driver seat belt switch(D)

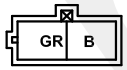

S1-12 Front passenger seat belt switch(D)

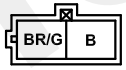

S1-13 Front passenger seat pressure sensor(D)

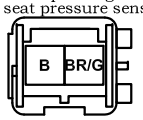

S1-06 Clock spring1(I)

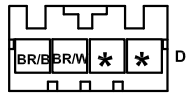

Harness mark: (F) (E) (D) (R)

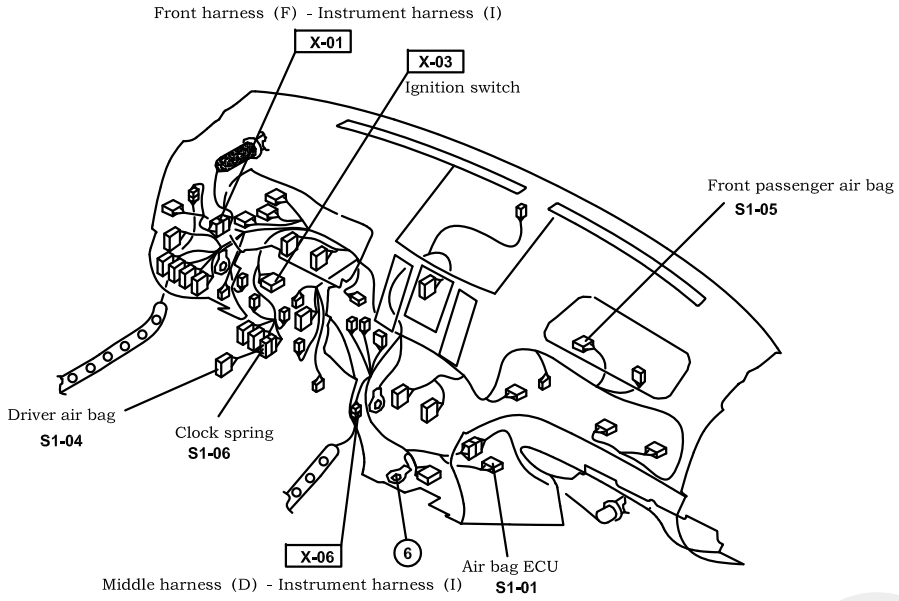

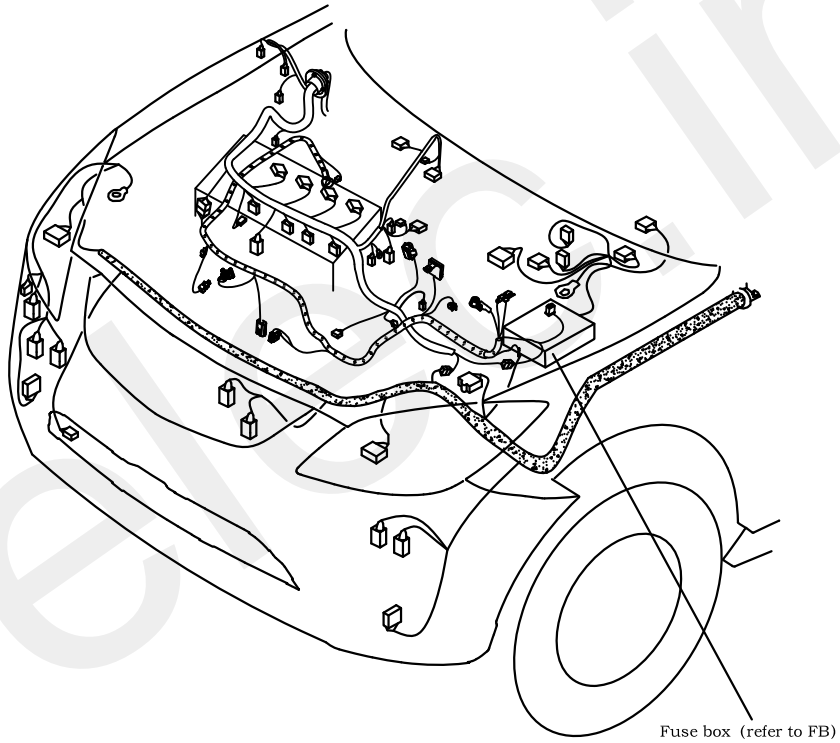

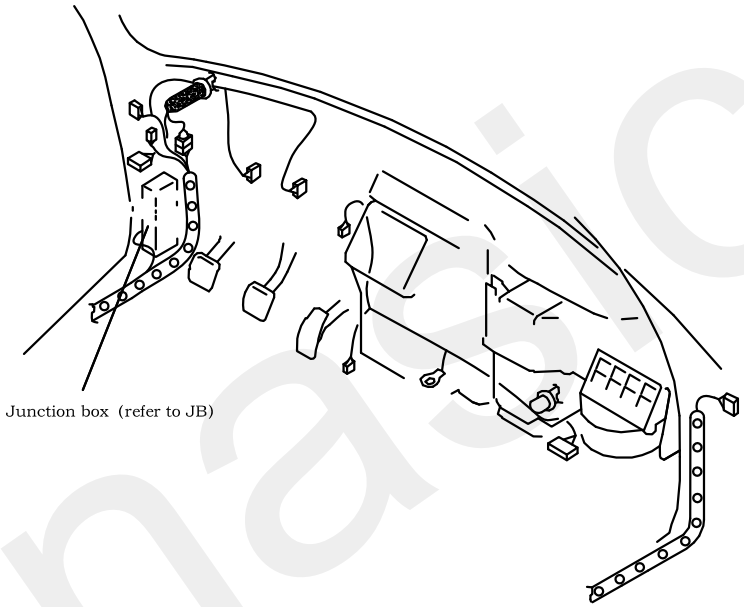

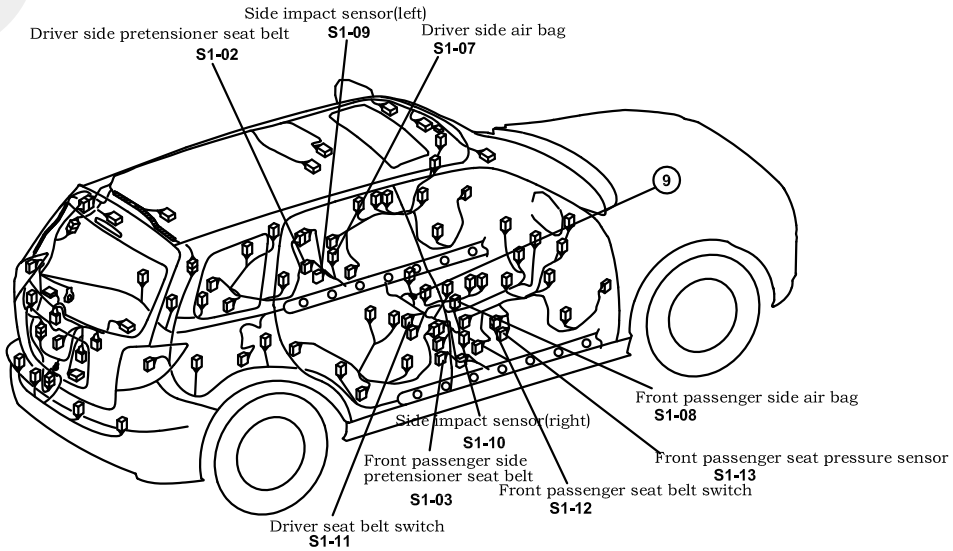

Anti-theft system (1.8T)

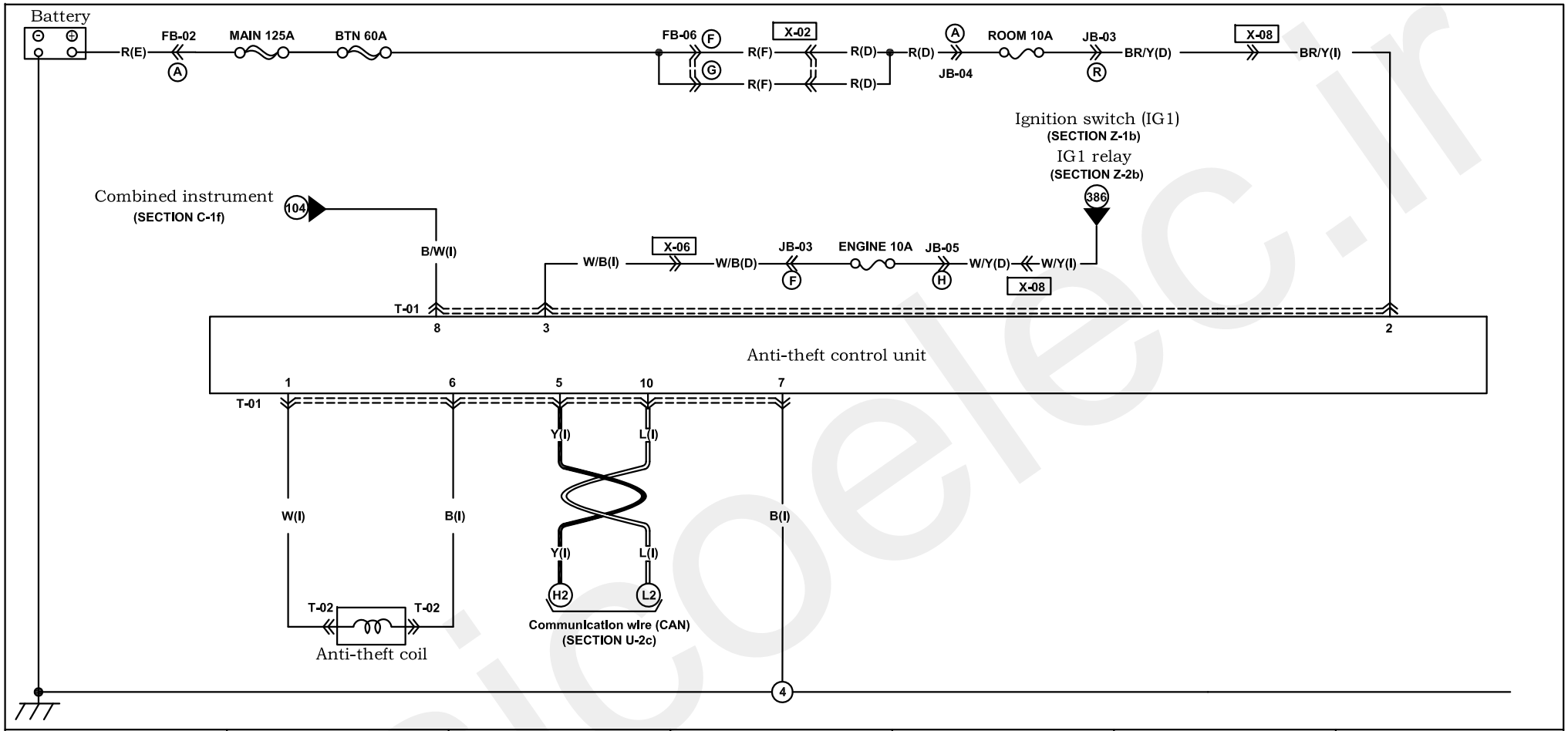

T-01 Anti-theft control unit (I)

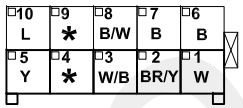

T-02 Anti-theft coil (I)

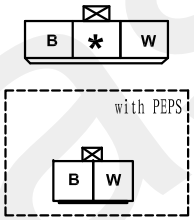

Harness mark: (F) (E) (D) (R)

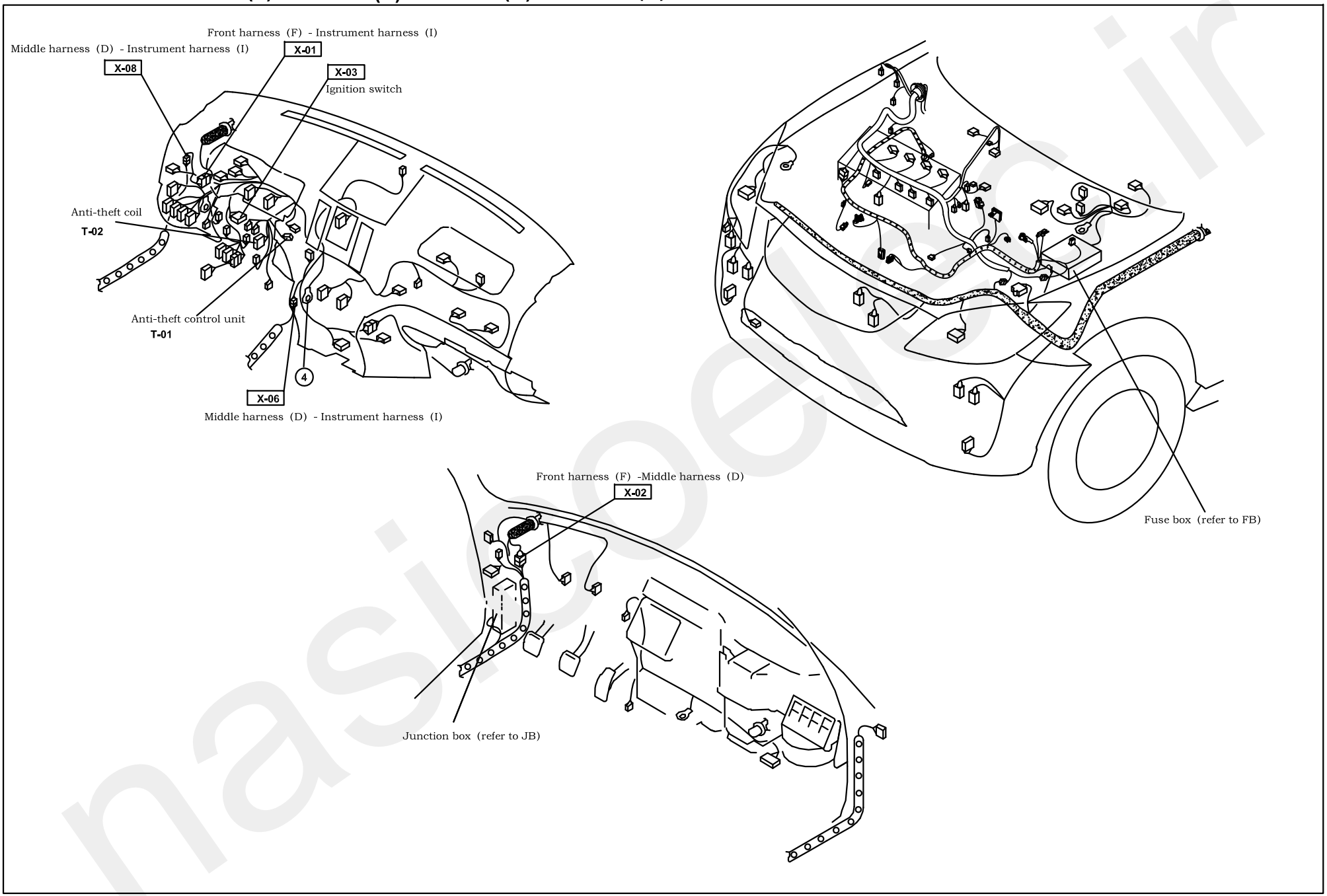

Diagnosis link connector (DLC)(1.8T)

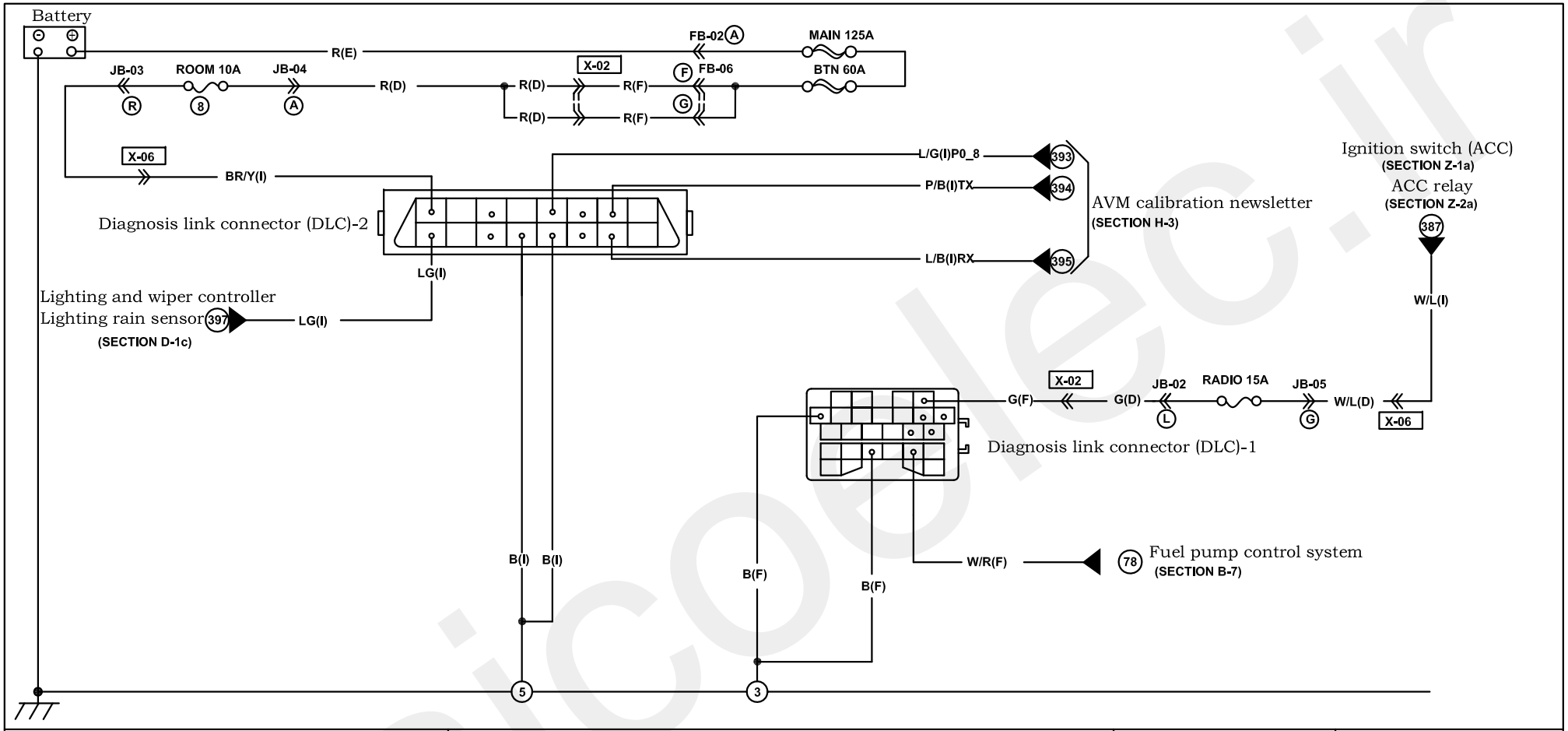

U-01 Diagnosis link connector (DLC)-1 (EM)

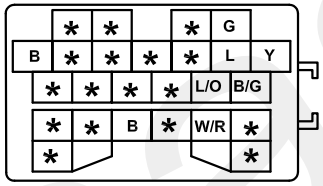

Note: view from the harness terminal

U-02 Diagnosis link connector (DLC)-2(I)

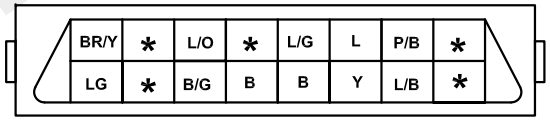

Note: view from the harness terminal

Harness mark: (F) (E) (D) (R)

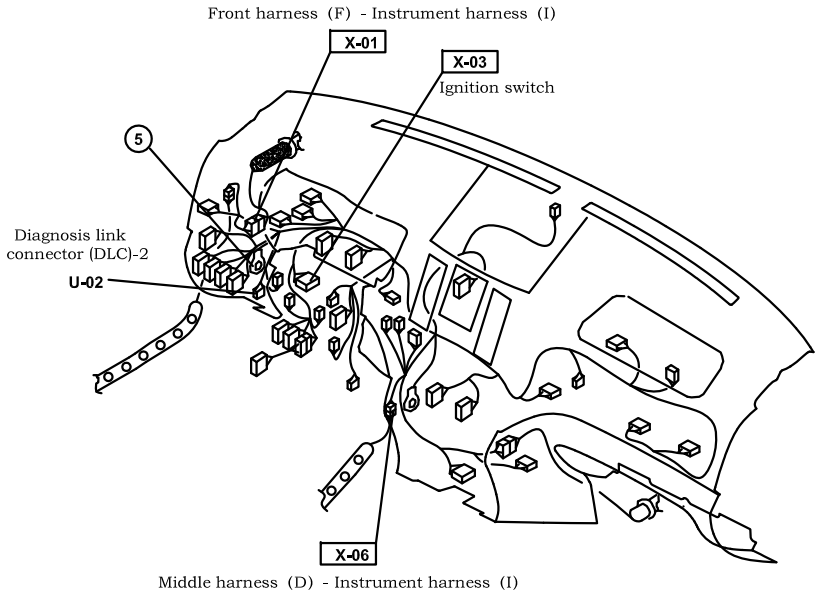

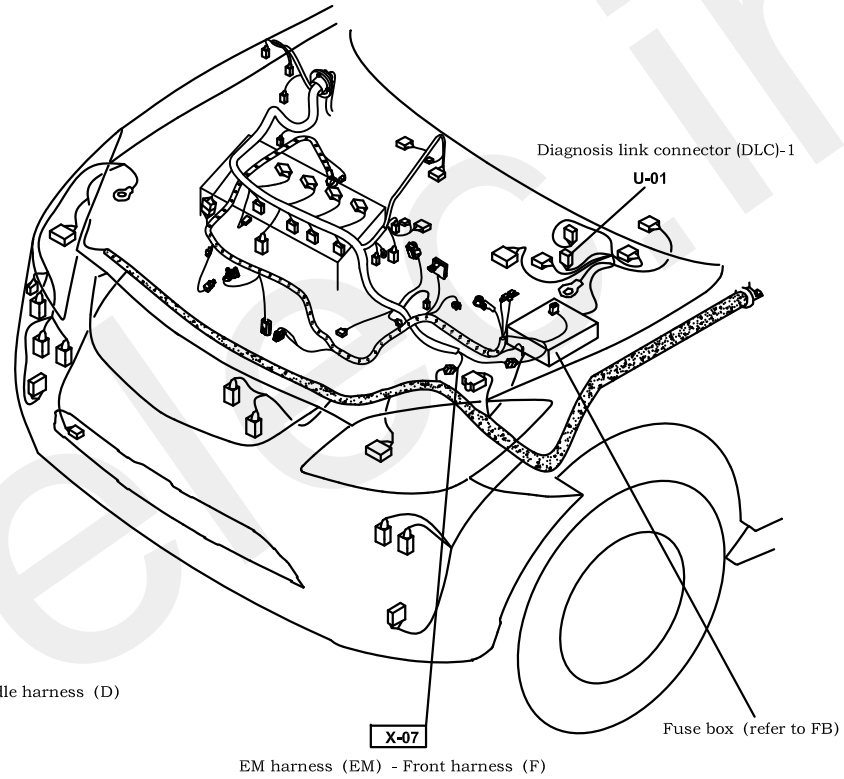

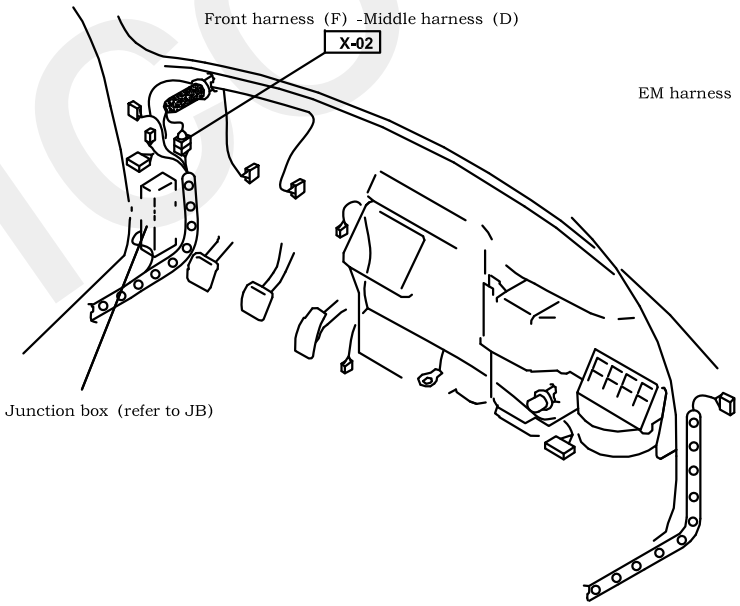

Communication wire (CAN)(1.8T)

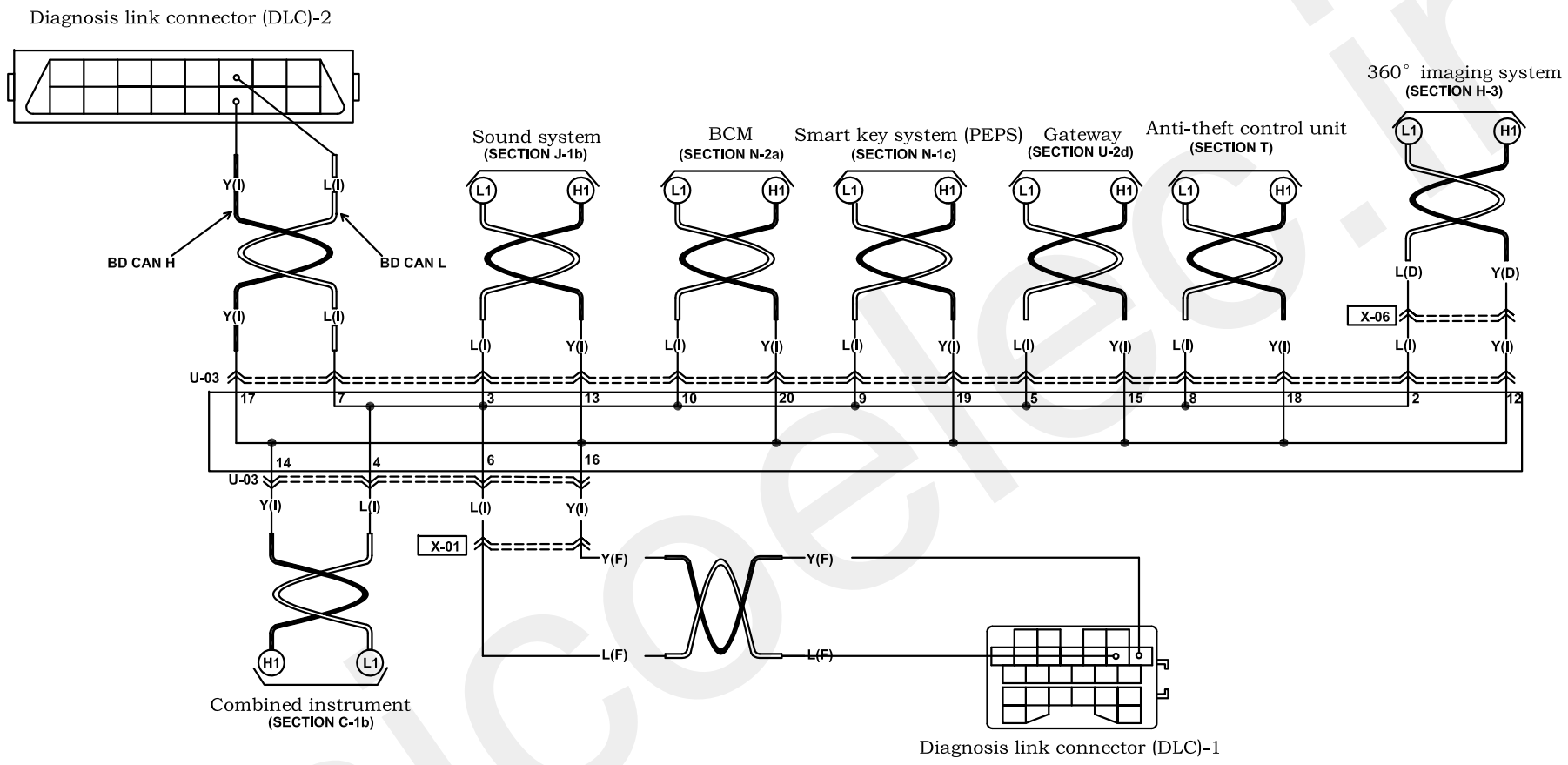

U-01 Diagnosis link connector (DLC)(EM)

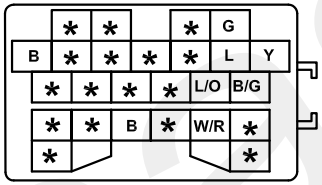

Note: view from the harness terminal

U-02 Diagnosis link connector (DLC)-2(I)

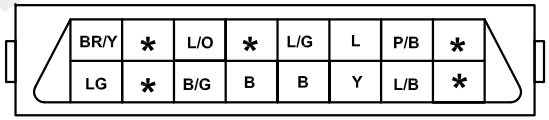

Note: view from the harness terminal

U-03 BD CAN Hubs

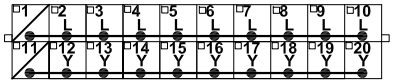

Harness mark: (F) (E) (D) (R)

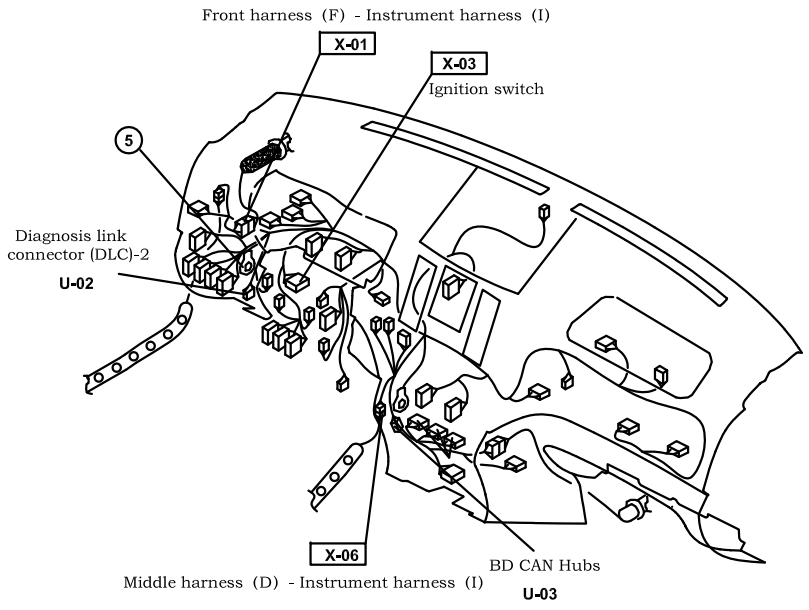

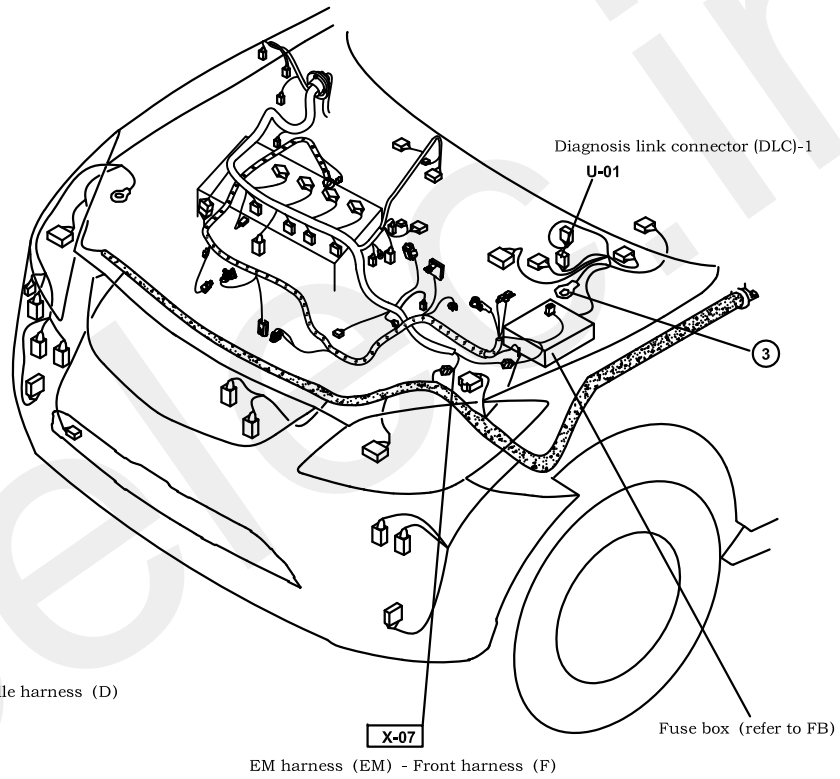

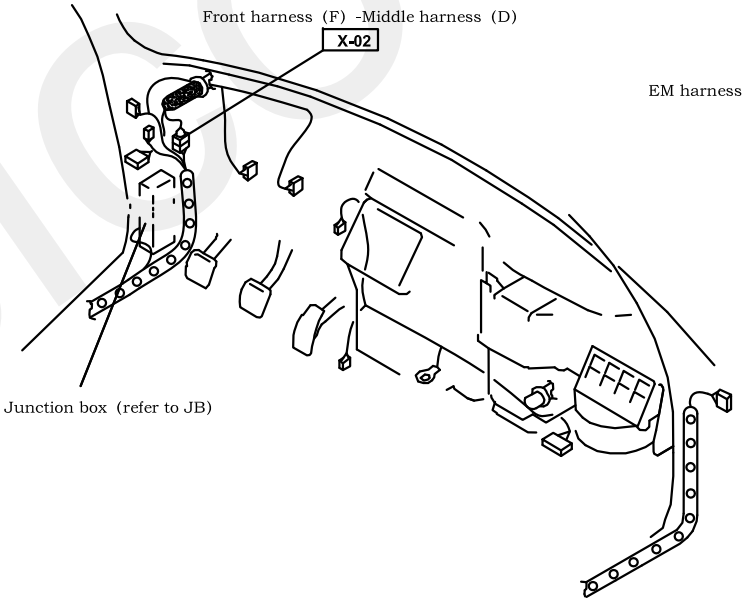

Communication wire (CAN)(1.8T)

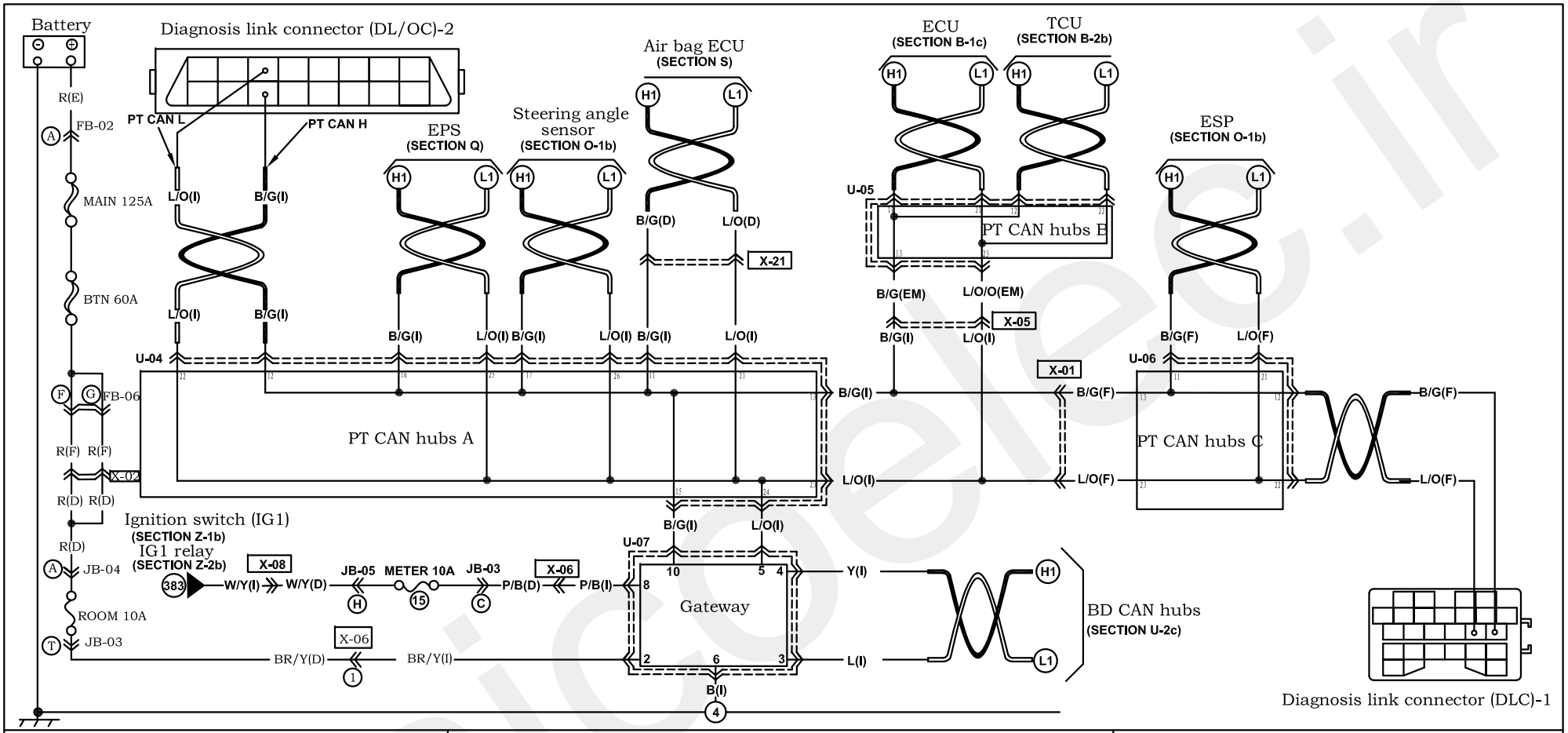

U-01 Diagnosis link connector (DL/OC)(EM)

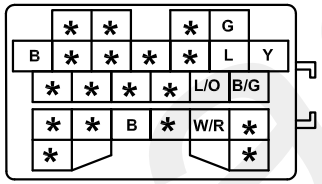

Note: view from the harness terminal

U-02 Diagnosis link connector(DL/OC)-2(I)

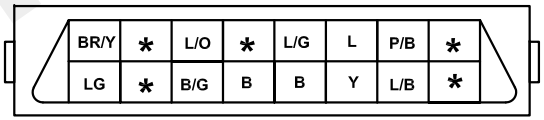

Note: view from the harness terminal

U-04 PT CAN hubs A

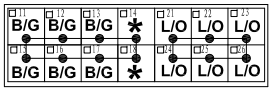

U-05 PT CAN hubs B

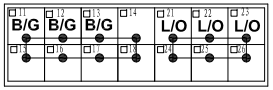

U-07 Gateway

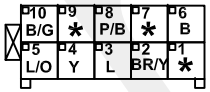

U-06 PT CAN hubs C

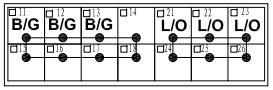

Harness mark: (F) (E) (D) (R)

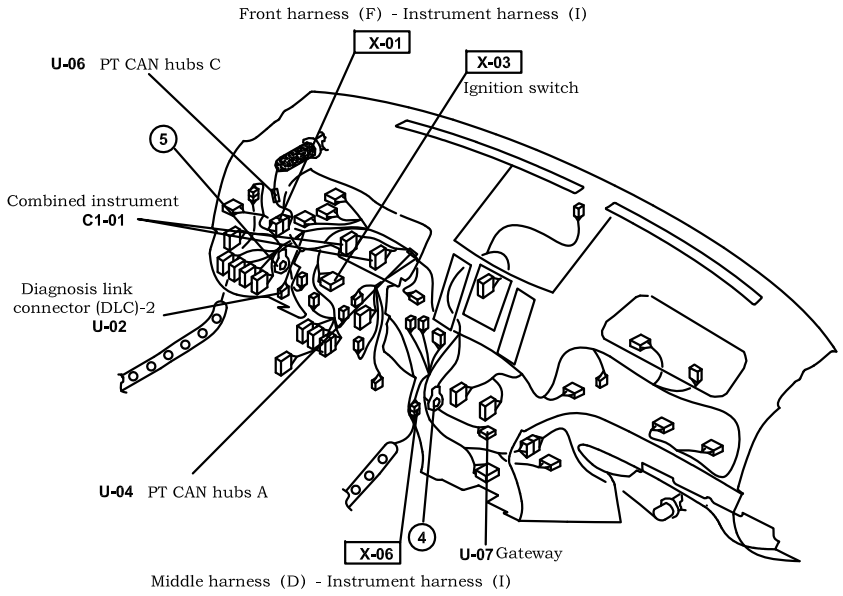

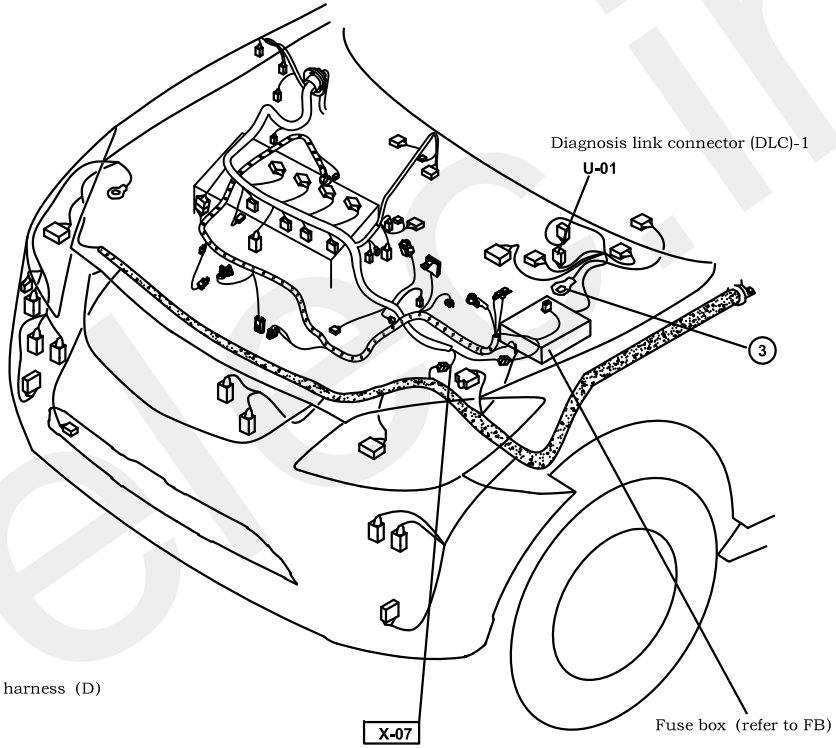

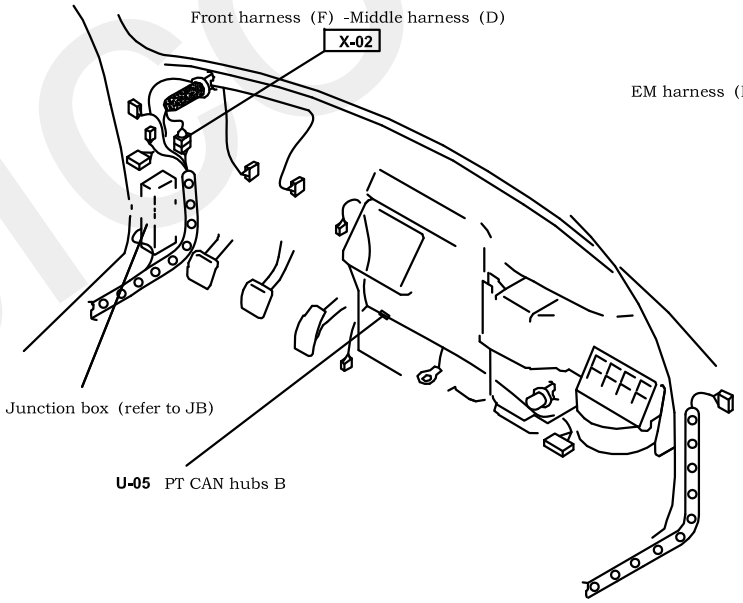

Fuse box wiring diiagram (1.8T)

FB

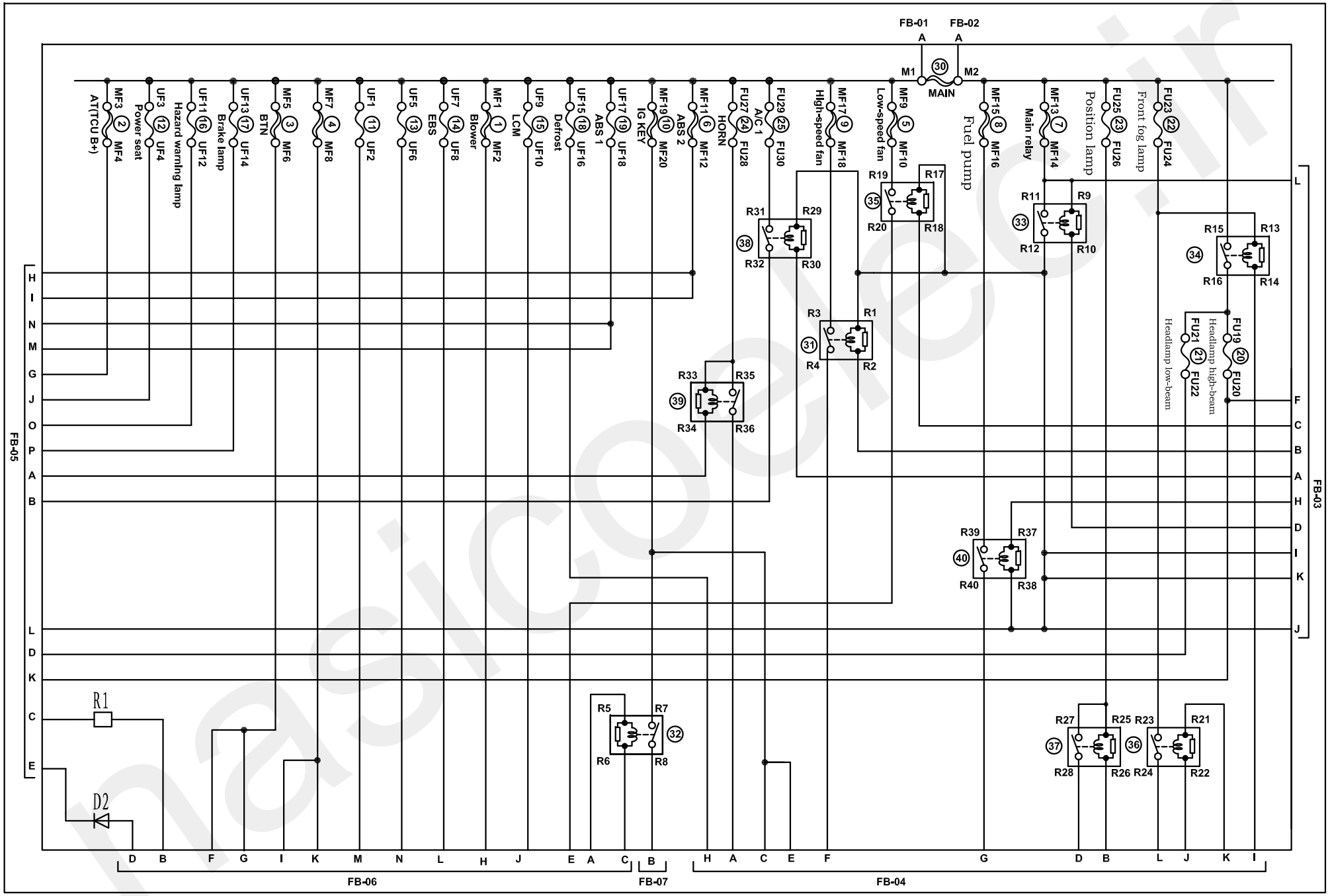

Fuse box (1.8T)

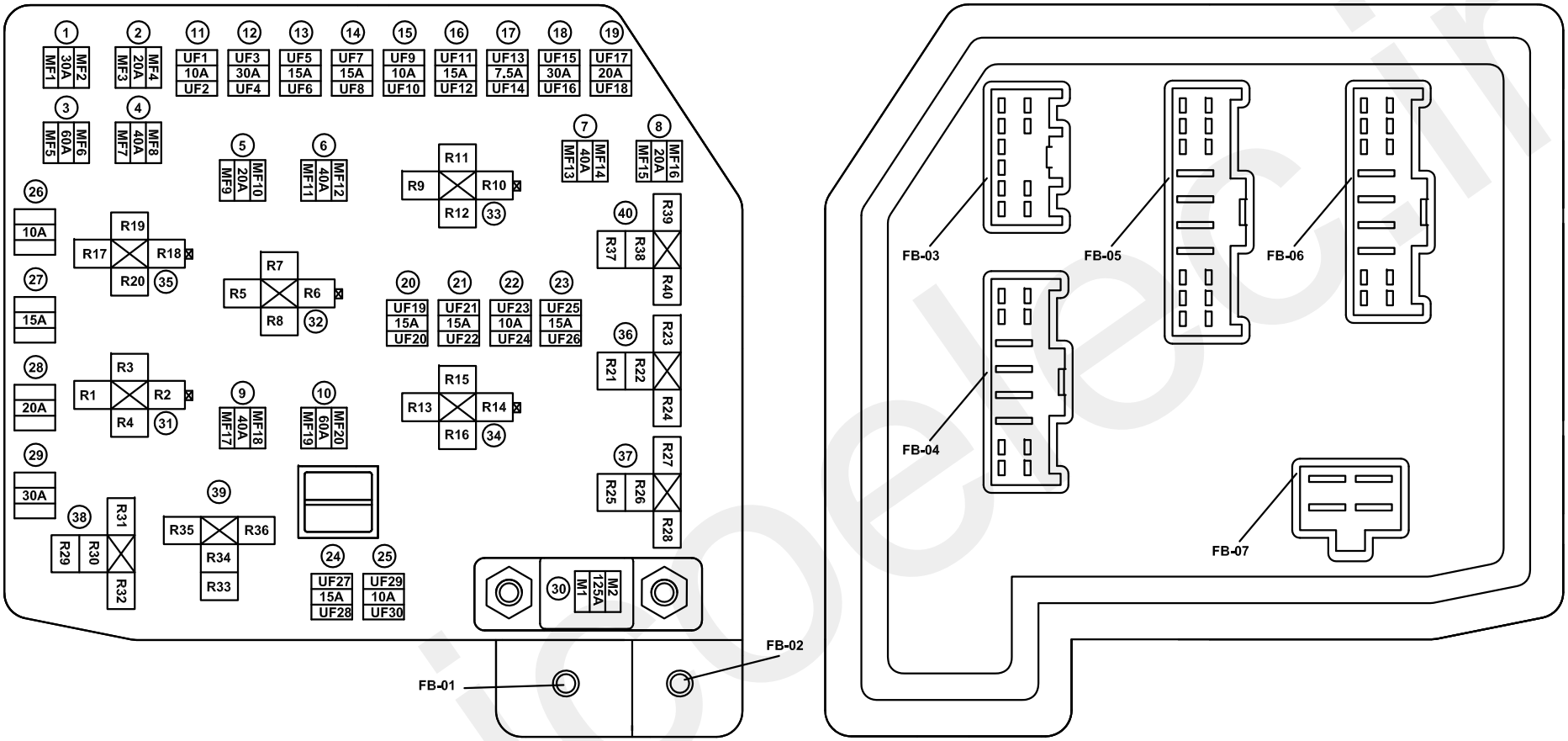

No.	Fuse name	No.	Fuse name	No.	Fuse name	No.	Relay name
1	Blower	11	PEPS 1	21	Headlamp low-beam	31	Fan
2	AT(TCU B+)	12	Power seat(main)	22	Front fog lamp	32	Start
3	BTN	13	PEPS 2	23	Position lamp	33	Main relay
4	*	14	EBS	24	HORN	34	Headlamp
5	Vacuum pump	15	LCM	25	AC 1	35	Vacuum pump
6	ABS 2	16	Hazard warning lamp	26	*	36	Front fog lamp
7	Main relay	17	Brake lamp	27	*	37	Position lamp
8	Fuel pump	18	Defrost	28	*	38	Compressor
9	Fan	19	ABS 1	29	*	39	Horn
10	IG KEY	20	Headlamp high-beam	30	Main fuse	40	Fuel pump

Fuse box (1.8T)

FB-01 Engine harness (E)

FB-02 Engine harness (E)

FB-03 EM harness (EM)

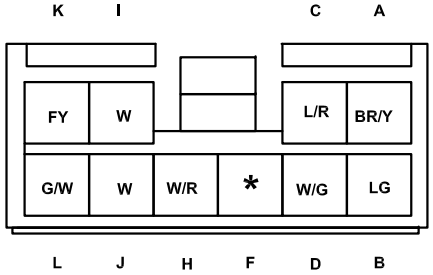

FB-04 Front harness (F)

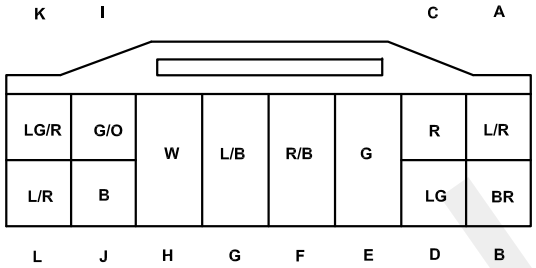

FB-07 Engine harness (E)

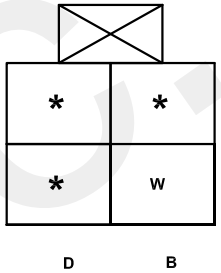

FB-05 Front harness (F)

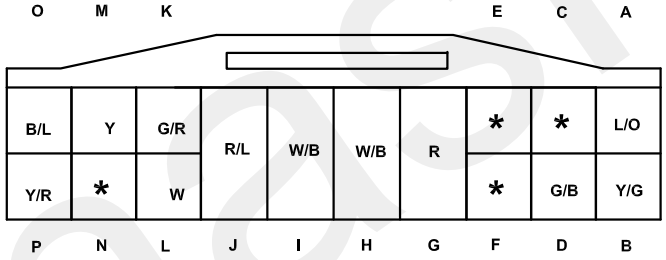

FB-06 Front harness (F)

$ with **PEPS**
& with start-stop

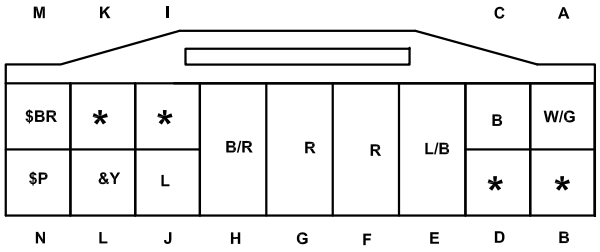

X-01 Front harness (F) - Instrument harness (I)

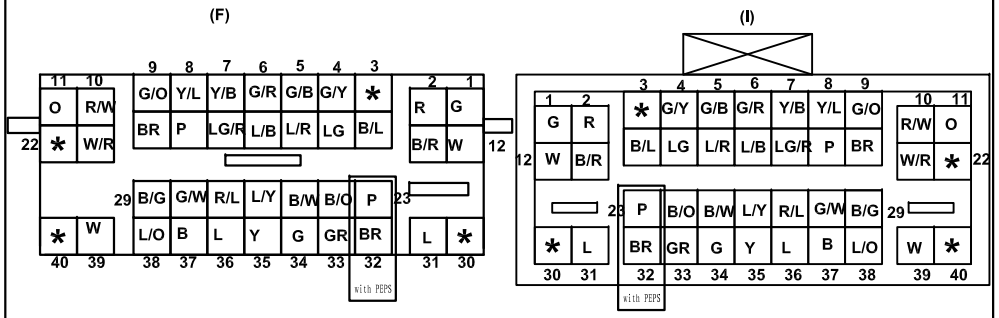

X-02 Front harness (F) -Middle harness (D)

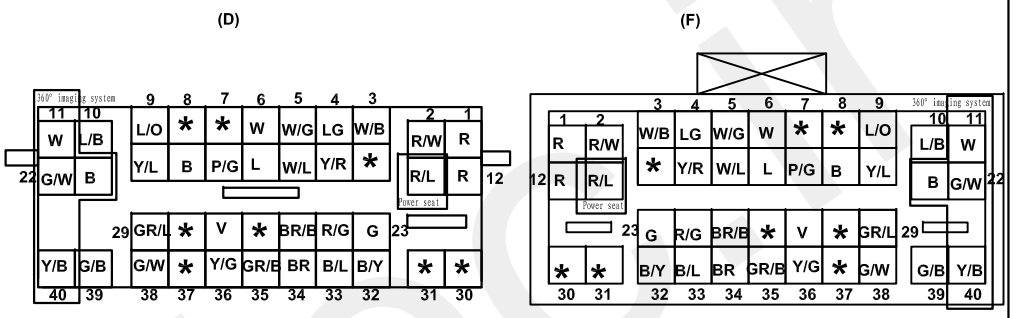

X-03 Ignition switch (I) & with start-stop

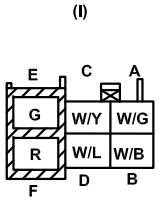

X-04 Engine harness (E) - EM harness (EM) & with start-stop

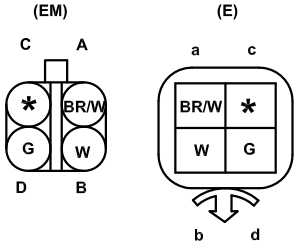

X-05 EM harness (EM) - Instrument harness (I)

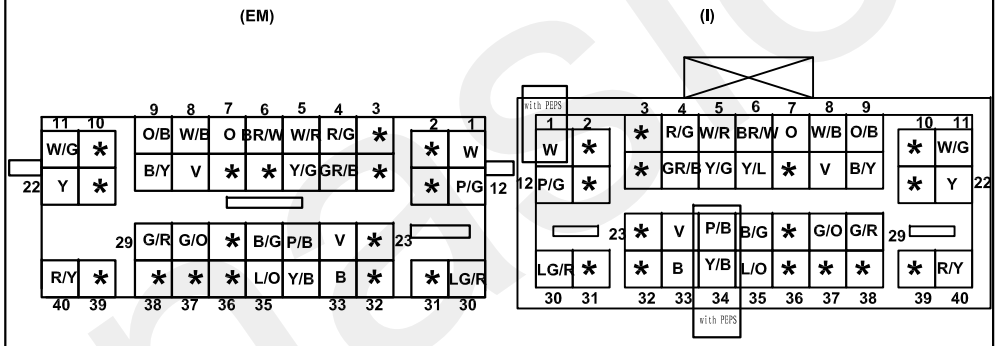

X-06 Middle harness (D) - Instrument harness (I)

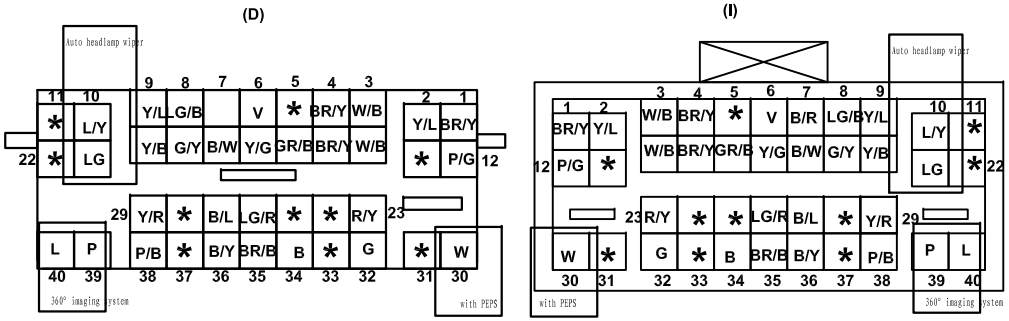

X-08 Middle harness (D) - Instrument harness (I)

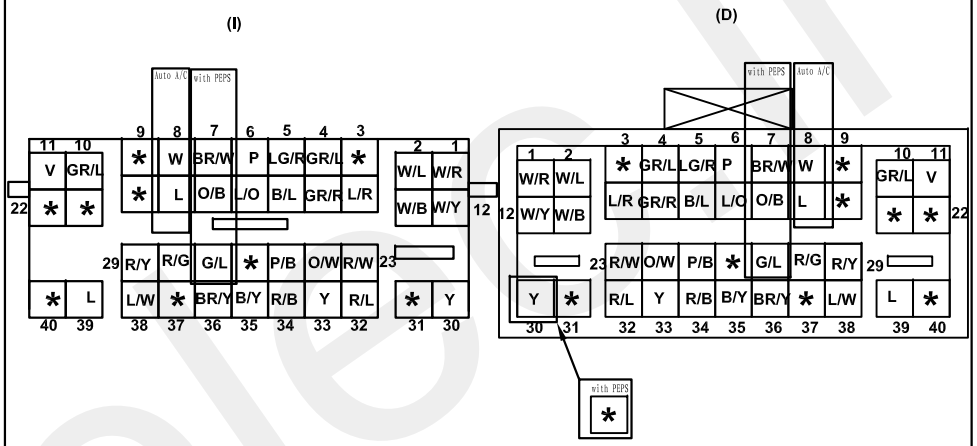

X-07 EM harness (EM) - Front harness (F)

< > with AT

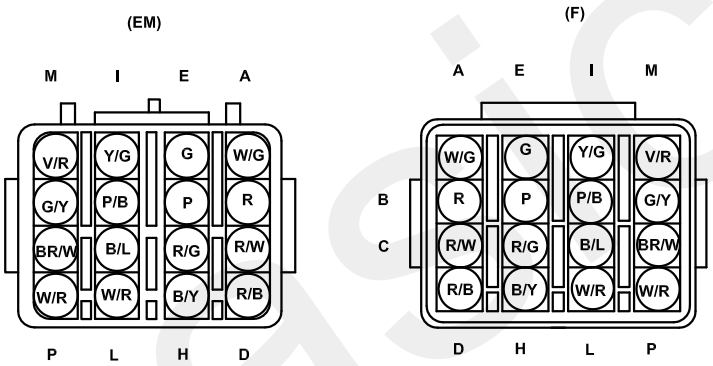

X-09 1# back door harness (R1#) -2# back door harness (R2#)

* with reversing camera
& with 360° imaging system

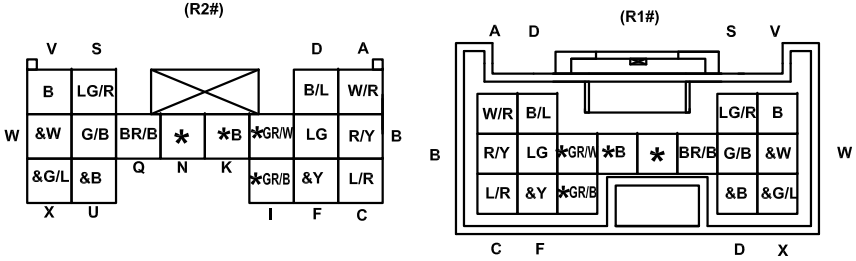

X-10 Middle harness(D) -2# back door harness (R2#2)

* with reversing camera
& with 360° imaging system

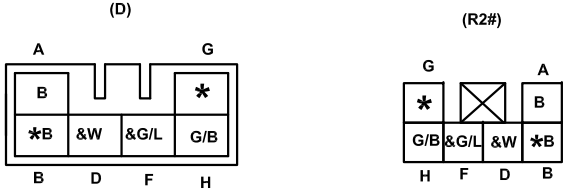

X-11 2# back door harness (R2#1) -Middle harness (D)

* with reversing camera
& with 360° imaging system

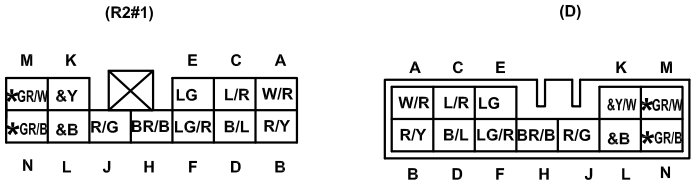

X-12 Middle harness (D) -Front door harness (DR1)

$ with PEPS
& with 360° imaging system

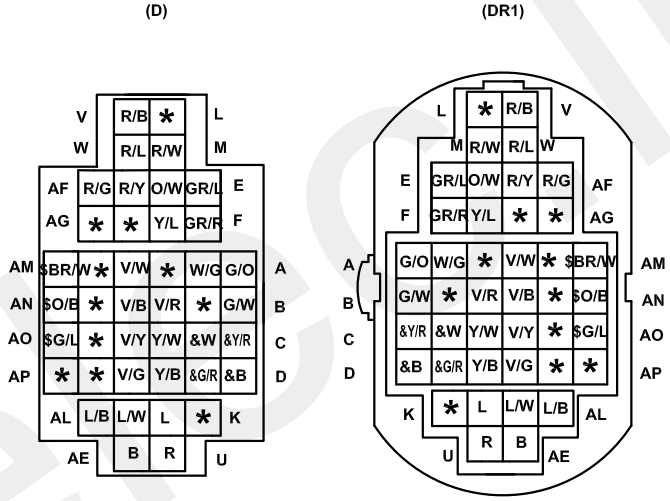

X-13 Middle harness (D) - Front door harness (DR2)

$ with PEPS
& with 360°imaging system

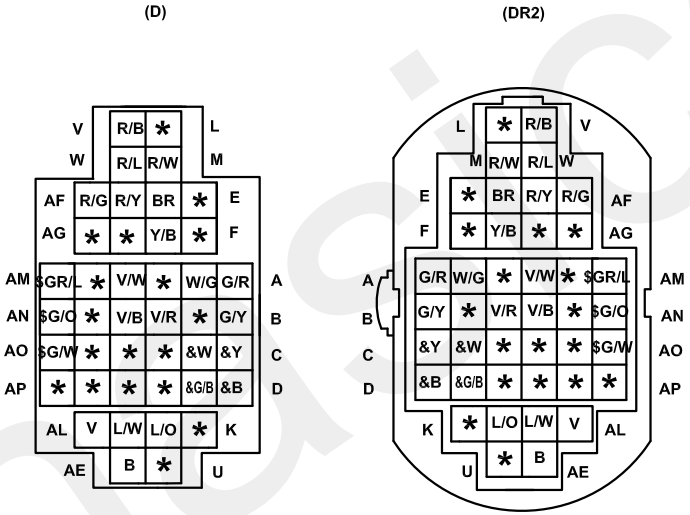

X-14 Middle harness (D) -Rear left door harness (DR3)

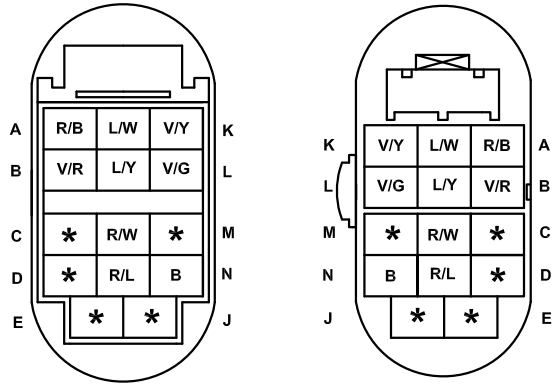

X-15 Middle harness (D) -Rear right door harness (DR4)

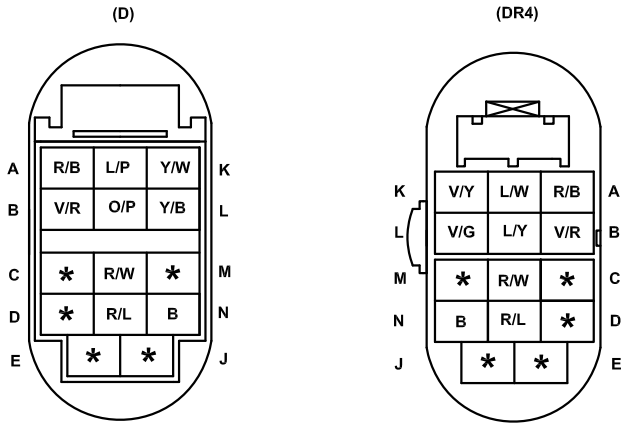

X-16 Middle harness (D) - Reversing radar harness (RA)

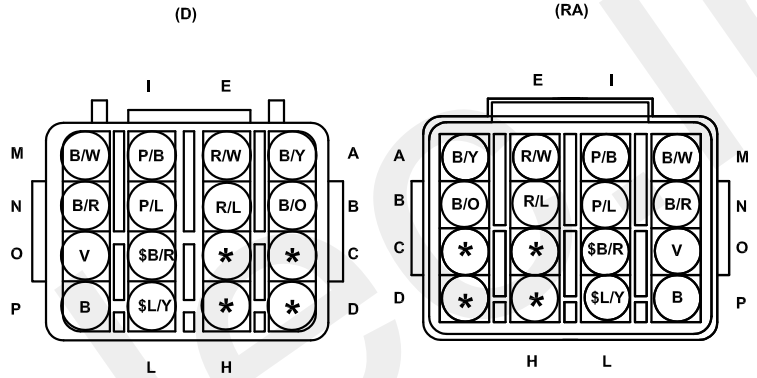

X-17 Middle harness (D) -Interior harness (IN)

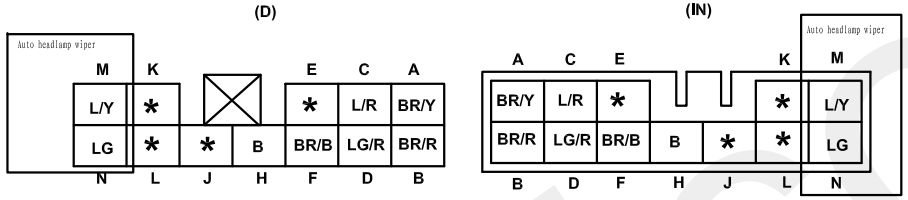

X-19 Middle harness (D) -Instrument harness (I)

X-20 Middle harness (D) -Instrument harness (I)

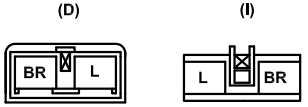

X-21 Middle harness (D) -Instrument harness (I)

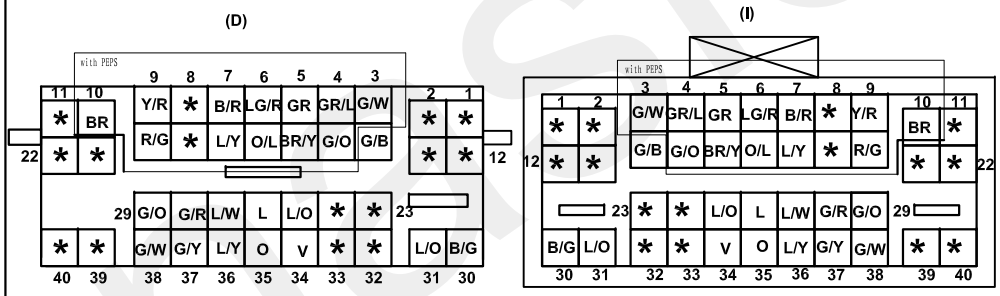

X-22 Instrument harness (I) -Front harness (F)

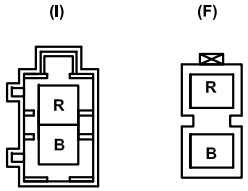

X-23 Engine harness (E) -EM harness (EM)

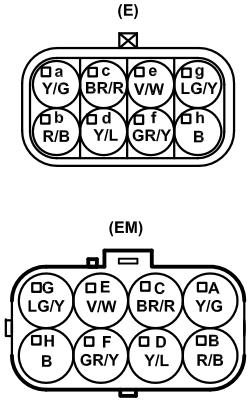

Junction box wiring diagram (1.8T)

JB

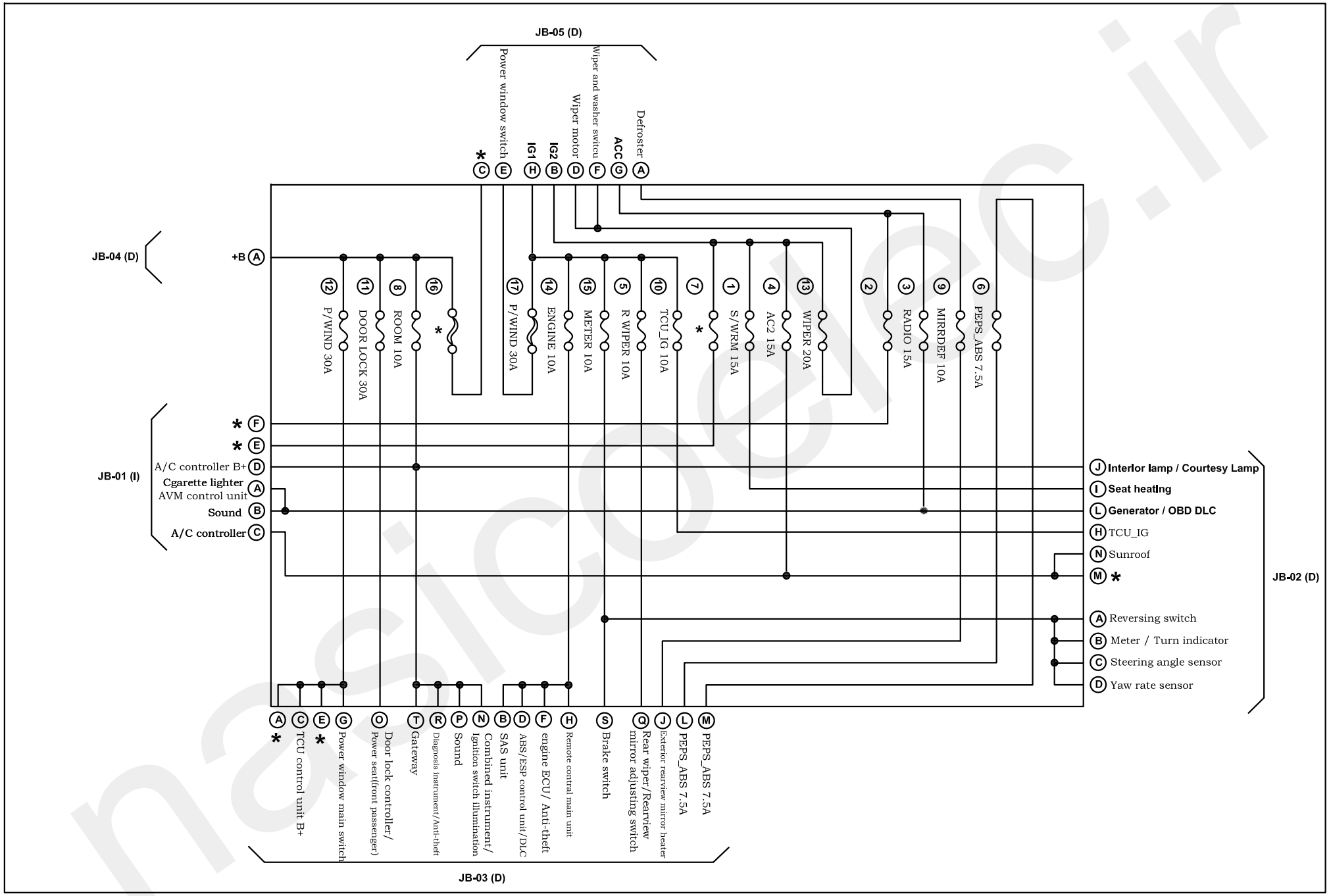

Junction box (1.8T)

JB-01 Instrument harness (I)

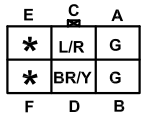

JB-02 Middle harness (D)

( ) with **ESP**

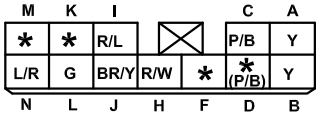

JB-03 Middle harness (D)

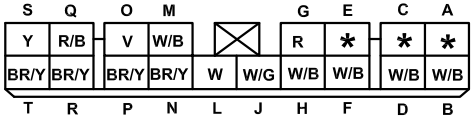

JB-04 Middle harness (D)

JB-05 Middle harness (D)

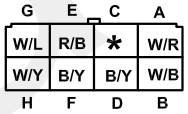

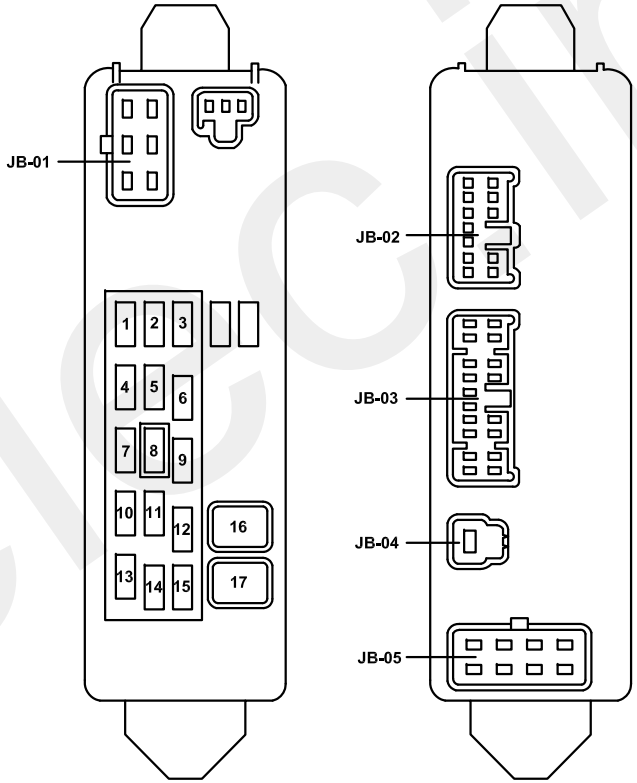

No.	Fuse name	Fuse	No.	Fuse name	Fuse
1	S/WRM	15A	10	TCU	10A
2	———	20A	11	DOOR LOCK	30A
3	RADIO	15A	12	P/WIND	30A
4	AC 2	15A	13	WIPER	20A
5	R WIPER	10A	14	ENGINE	10A
6	PEPS_ABS	7.5A	15	METER	10A
7	———	—	16	———	—
8	ROOM	10A	17	P/WIND	30A
9	MIRRDEF	10A			